K-Suite™

Single-Serve Hospitality Brewer

KEURIG COMMERCIAL

- Pour fresh water for each brew; no standing water
- Brew any size from 6-8 oz.
- Easy-to-clean surfaces
- Cord storage eliminates clutter
- Fits most travel mugs, thanks to a removable drip tray
- Auto-Off feature saves energy

Designed for hospitality use

Features

Brew Sizes	6 oz. - 8 oz.
Water Source	Pour-over
Cold Water Tank	6 oz. - 8 oz.
Drainable Internal Water Tank	Yes - Manual
Interface	Button Control
- Language	English
- Programmable Auto Off	Yes
- Customizable Brew Temperature	No
- Customizable Brew Size Options	Yes

Specifications

Brewer Weight (Empty)	4.65 lbs.
UL Listed	cULus Hospitality/Household
Electrical	120 VAC, 60 Hz
Power	1470W
Plug Type	2-Wire Plus Ground
Order ID/GTIN	10611247381394
UPC Number	611247381397
Case Weight	6.5 lbs.
Case Dimensions	14.76" H x 5.79" W x 13.52" D

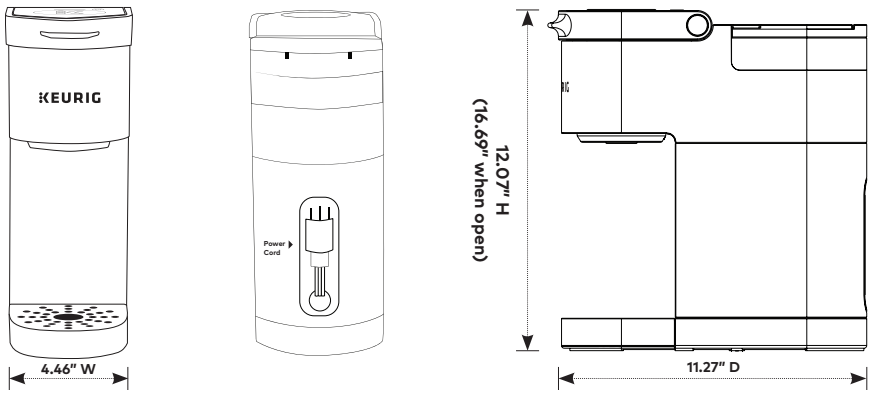

#97179MS

© 2019 Keurig Green Mountain

www.Commercial.Keurig.com

K-Suite™

Single-Serve Hospitality Brewer

KEURIG COMMERCIAL

Designed for hospitality use

1 Lift

handle and insert K-Cup® pod.

2 Place

mug and close the handle.

3 Pour

Pour 6 oz. - 8 oz. of water into the reservoir. Push large button to begin brew!

#97179MS

© 2019 Keurig Green Mountain

www.Commercial.Keurig.com