ENGLISH

Trex®

2013 INSTALLATION GUIDE

TREX® DECKING AND RAILING

Trex® decking & railing

TREX TRANSCEND® DECKING & RAILING SYSTEM

The ultimate expression of beauty and function joins forces with unsurpassed fade and stain resistance

TREX ENHANCE® DECKING

All the beauty (and none of the bother) of real wood

TREX® SELECT™ DECKING & RAILING SYSTEM

Easy design scheme brings accessible luxury right to your doorstep

ON THE COVER
decking: Transcend® in Spiced Rum
railing: Trex® posts in Classic White and Transcend in Vintage Lantern with a Tree House cocktail rail and round aluminum balusters

ALSO AVAILABLE
TREX® ADA HANDRAIL
Complementary and compliant

Trex® Installation Guide

In your hands, you're holding everything you need to begin building with Trex® decking and railing. This step-by-step guide will show you how to create a beautiful outdoor living space that fits perfectly into your or your client's lifestyle.

Trex has been proven in the field. After almost twenty years of unparalleled performance, it offers warm, natural beauty and inviting comfort that no other product can match. Maybe that's why Trex is asked for by more customers than any other brand in the business.

From time to time, Trex revises its installation instructions. To ensure you have the most up-to-date installation instructions, please visit *trex.com*.

TREX® INSTALLATION GUIDE

CONTENTS

SECTION ONE: General Information

General Tips 5
Trex CustomCurve® (Bending Trex) 5
Job Site Storage 5
Safety 6
Tools 6
Care and Cleaning 7
Mold Technical Bulletin 9
Painting Technical Bulletin 10
Physical and Mechanical Properties 12
Glossary of Terms 14

SECTION TWO: Planning Ahead

Trex® Decking 17
Railing (Including ADA Handrail) 17
Trex® Lighting 17
Trex® RainEscapes® Drainage System 17
Installing Hot Tubs, Planters, and Seating 17
Installing Fireplaces and/or Fire Pits 17
Installing a Pergola 18
Special Patterns 18

SECTION THREE: Lighting

Lighting Specifications and Profiles 21

How to Install Trex® DeckLighting™

Parts List 22
Lighting and Wiring Overview 22
Wiring 23
Post Cap Lights 24
Deck Rail Lights 24
Riser Lights 24
Recessed Deck Lights 25

SECTION FOUR: Decking

Decking Specifications and Profiles 27
Trex Hideaway® Hidden Fastening System 28
Decking Fasteners 29
Framing and Fastening Tips 31
Rooftop Decks and Sleeper Systems 32
Code Compliance 33
Gapping 34
Stairs 35

How to Install Decking

Tips for Installing a Trex Hideaway® Hidden Fastening System (Stainless Steel or Universal) 36
How to Install Trex Hideaway Stainless Steel 37
How to Install Trex Hideaway Universal Hidden 38
How to Install Trex Escapes® Boards with Trex Hideaway Universal Fasteners 39
How to Replace Trex Boards 39
How to Install Stair Treads 40
How to Install Trex Porch Floorboards 41
How to Install Trex Porch Stair Treads 42
How to Install Structural Porch Posts 43
How to Install Post Mounts on Deck Board 45
How to Install Post Mounts on Concrete 46
How to Install Post Mount Upper Aluminum Guide Block with Trex Newel Post for Railing Assembly 48

SECTION FIVE: Railing

Trex Transcend® Railing Specifications and Profiles 50
Trex Transcend Railing Systems 51
Trex® Select™ Railing 52
Designer/Traditional Railing Specifications and Profiles 53
ADA Railing Specifications and Profiles 54

How to Install Railing

Trex Transcend® Railing 55
- Parts List 55
- Trex Transcend Railing Styles 56
- Trex Transcend Railing Installation 57
- Customizing Your Railing 67
  - How to Install On-an-Angle Railing 67
  - How to Install Bird's Mouth Railing 68
  - How to Install Stair Railing 69
- How to Install Foot Blocks 71

Trex® Select™ Railing 73
- Parts List 73
- How to Install Trex Select Railing 74
- How to Install Trex Select Stair Railing 76
- How to Install Trex Select Railing Foot Blocks 79
- How to Install Trex Select Railing Foot Blocks for Stair Railing 80

Trex Designer Series Railing® 81
- Parts List 81
- Designer Railing Styles 81
- How to Install Standard Railing 82
- How to Install Contemporary Railing 85
- How to Install Standard Stair Railing 87
- How to Install Contemporary Stair Railing 89

Trex Traditional Railing 91
- Parts List 91
- Traditional Railing Styles 92
- How to Install Raised Railing Standard Balusters/Option 1 93
- How to Install Raised Stair Railing/Option 1 94
- How to Install Raised Railing Contemporary Balusters/Option 2 95
- How to Install Raised Stair Railing/Option 2 97
- How to Install Raised Railing Architectural Balusters/Option 3 99
- How to Install Raised Stair Railing/Option 3 101

Trex ADA Railing 102

SECTION SIX: Warranties

Trex Transcend, Enhance, and Universal Fascia Limited Fade and Stain Warranty 107
Trex Limited Warranty 110

Color Palette ....Inside Back Cover

This symbol indicates copy continues to next page.

GENERAL TIPS

- Most colored chalk lines are permanent. **Use baby powder or Irwin Strait-Line®* Dust-Off Marking Chalk available at *Irwin.com***
- We **DO NOT** recommend sanding. Sanding will change the appearance of the surface of Trex® material and **will void the warranty with respect to any condition caused by such sanding.**

- When drilling large or deep holes, periodically lift the bit out of the hole to remove the shavings.
- Throughout this guide, feet are converted to meters and inches to centimeters.
- If you want to minimize the appearance of joists through the spaces between boards, paint the top of your joists black.
- Trex® decking and railing is suitable for a wide range of applications. It is not intended for primary structural members such as load bearing columns, joists, stringers, and beams. For information on Trex Elevations® Steel Deck Framing, see *trex.com*.
- Construction methods are always improving. Please make sure you have the most up-to-date installation instructions by visiting *trex.com*.

Trex® CustomCurve®
HEATING & BENDING SOLUTION

Trex is the first brand to have a bending solution exclusively for contractors, giving you the ability to create those unique, showpiece decks that are unmistakably Trex.** For more information, visit *trexpartners.com*.

NOTE: *Trex Transcend® Porch boards cannot be bent.*

ALWAYS GREEN: Trex decking is made of 95% recycled materials, including plastic shopping bags, reclaimed wood, and sawdust.

JOB SITE STORAGE

Remember when storing Trex decking, railing, fencing, and trim:

- You must store Trex outdoor-living products on a flat and level surface. Adjust support blocks accordingly.
- You must support Trex products with dunnage when placing bundles.
- When stacking Trex products, supports should start at each end and be spaced 2′ (0.61 m) on center. Supports should line up vertically.
- **DO NOT** stack Trex higher than six bundles (units) or 12′ (3.7 m) high.
- **Cover material on site until you are ready to install it.**

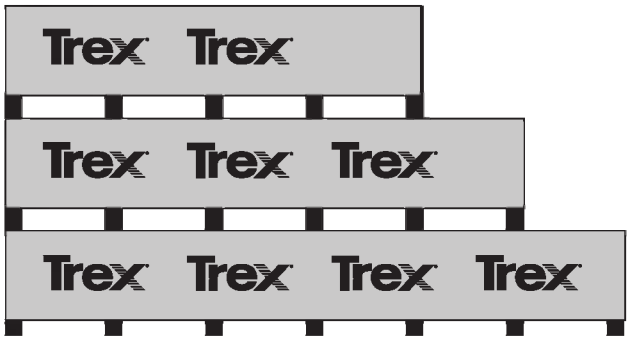

Units of Trex lumber on level ground.

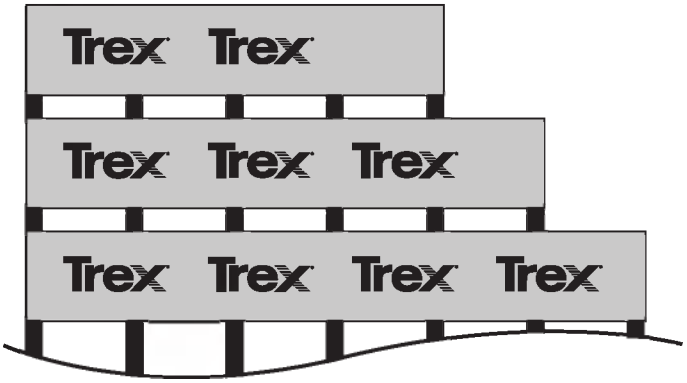

Units of Trex lumber on uneven ground.

**Strait-Line® is a registered trademark of Irwin Industrial Tool Company.*

***Trex® CustomCurve® is manufactured and distributed by Curvelt, LLC. Trex® and CustomCurve® are trademarks of, and are used by Curvelt, LLC under a license with, Trex Company, Inc.*

SAFETY

When working on any construction project, you should wear protective clothing and safety equipment. Wear safety glasses, gloves, a dust mask and long sleeves, particularly when cutting in confined spaces.

Trex decking and railing are heavier and more flexible than wood. **DO NOT** try to lift the same quantity of Trex boards as you would traditional lumber. Go to *Trex.com* for Material Safety Data Sheets (MSDS).

TOOLS

You can create intricate shapes, profiles, and patterns with Trex. Most installments require no special tools. For best results, use carbide-tipped blades and router bits.

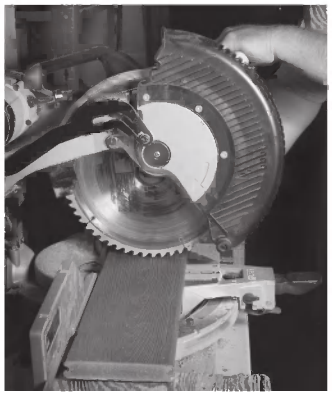

When using a miter saw, we recommend using the Diablo® Trex® Blade*. This comes in 3 different sizes and is ideal for cutting all our decking and railing products (these are not recommended for cutting Trex Elevations®). Refer to www.trex.com for more information on the Diablo® Trex® Blade.

Install Trex recommended fasteners with standard power drills.

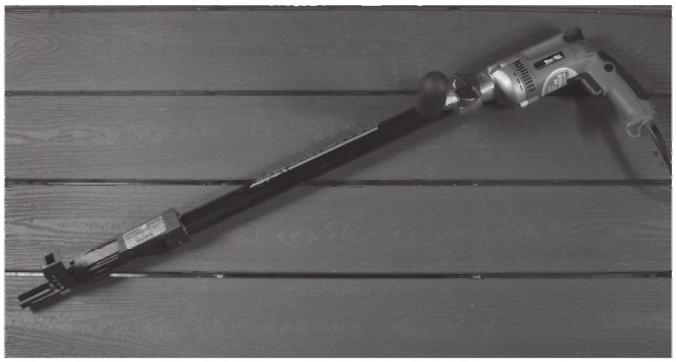

Screw and nail guns provide a quick and easy way to fasten Trex.

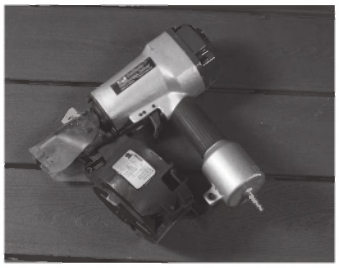

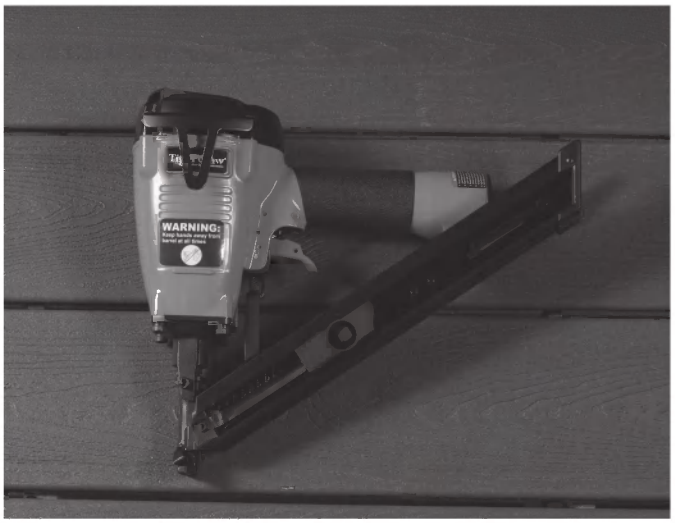

The pneumatic gun by Tiger Claw®** is designed to dramatically decrease the time it takes to install a deck. Strong, lightweight, and durable, the gun uses Trex Hideaway® fasteners. Trex Gun Pail includes 900-count connector clips and TC-SG collated pneumatic screws.

Trex routs beautifully to give extremely crisp edges. The groove cutter/router bit is used with the Trex Hideaway fastener system.

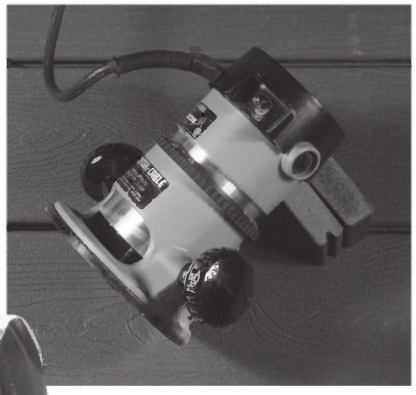

⚠ CAUTION

DO NOT rout balusters. Routing will change the surface of Trex products.

**Diablo® is a registered trademark of Freud® America.*

***Tiger Claw® is a registered trademark of Tiger Claw, Inc.*

TREX TRANSCEND®/TREX ENHANCE®/ TREX® SELECT™ CARE AND CLEANING GUIDE

All exterior building materials require cleaning. Generally, soap and water is all that is required to clean Transcend, Enhance, and Select products. For further information, see below.

PROBLEM	SOLUTION
Dirt and Debris	The affected area should be sprayed off with a hose to remove surface debris. Use warm soapy water and a soft bristle brush to remove dirt and debris from the embossing pattern.
Chalk Lines	High permanence chalk lines may discolor the surface. Use only Irwin Strait-Line®* Dust-Off Marking Chalk (purple), available at *Irwin.com*
Tannins Due to Debris	Remove all debris from the deck using a hose or broom. Once the deck surface is dry, apply a "deck brightener"** to the deck as directed by the manufacturer. Deck brighteners contain oxalic acid, which will remove tannins.
Ice and Snow	A plastic shovel may be used to remove snow from the deck. Use calcium chloride or rock salt to melt the snow and ice from the deck surface.
Oil/Grease/Food	All food spills should be removed as soon as possible. **The surface must be cleaned within seven days to maintain the stain warranty.** To remove, spray off with a hose and use warm, soapy water and a soft bristle brush to remove spills from the embossing pattern.
Mold and Mildew	If debris such as pollen and dirt is allowed to remain on the deck surface, mold can feed on the biofilm. Using a hose and warm, soapy water with a soft bristle brush is recommended to remove the food source and mold.
Using a Pressure Washer (Concrete, Stucco, or Ground-in Construction Dirt)	A pressure washer with no greater than 3100 psi***** that has a fan attachment/ adjustment and soap dispenser may be used to remove dirt, concrete dust, or other types of construction dirt. Spray deck with soap, and then follow by gently scrubbing each deck board with a soft bristle brush. Spray/rinse each individual deck board using fan tip no closer than 8" from the decking surface. RINSE THOROUGHLY. If dirty water from cleaning is left to dry, this will cause a film to remain on the decking surface.
Maintaining Transcend® or Select™ railing	**NEVER** use acetone or other solvents on Trex Transcend or Select railing. For color transfer issues (from attachment of baluster spacer), use Mr. Clean®, Magic Eraser® Original*** or Magic Eraser® Extra Power to help remove this. For small surface scratches, marks, or scuffs, use Dupli-Color Scratch Seal® Clear Sealer Pen. ****

**Strait-Line® is a registered trademark of Irwin Industrial Tool Company.*

***Use of products containing bleach or acid may lighten the underside or cut areas of the Trex Transcend/Enhance/Select decking.*

**** Mr. Clean® and Magic Eraser® are registered trademarks of The Procter and Gamble Company.*

*****Scratch Seal® is a registered trademark of The Sherwin-Williams Company.*

******Use of a pressure washer greater than 3100 psi could damage the boards and void the warranty.*

TREX DECKING AND RAILING GENERAL CARE AND CLEANING GUIDE
(STANDARD COMPOSITE AND PVC)

All exterior building materials require cleaning. Trex recommends periodic cleaning with soap and water (for general dirt and debris) or a commercially available deck cleaner twice a year (for stains or mold/mildew). For additional information, see below.

PROBLEM	SOLUTION
Dirt and Debris	Clean deck to remove dirt and debris. Soap and hot water is all that is needed.
Chalk Lines	Most colored chalks are permanent. For Trex use either baby powder or Irwin Strait-Line®* Dust-Off Marking Chalk available at *Irwin.com*
Visible Printing	The printing on the side of Trex decking boards are required by building codes. With careful installation, most printing can be hidden. Visible printings can be lightened with acetone.
Water Spots, Leaf Staining and Wood Tannins	Tannin leaching occurs naturally in Trex and all wood-based products. Allow for at least 12 weeks of normal weathering. This process may be hastened through the use of a product containing oxalic or phosphoric acid, commonly known as Deck Brightener.**
Ice and Snow	Calcium chloride or rock salt, available in many home centers, will melt ice on Trex decking. Rinse off when first practical. Use caution when removing snow or ice with a snow shovel, and **NEVER** use a metal snow shovel on a Trex deck. A shovel may scratch the deck, which is **not covered under warranty.**
Scuffs and Abrasions	Scuffs and abrasions can fade or disappear naturally after 12 - 16 weeks of weathering. This can be accelerated with a product containing oxalic or phosphoric acid, also known as Deck Brightener**.
Rust Stains, Ground-In Dirt and Grime and Pigment Staining	Use a cleaning product containing oxalic or phosphoric acid base, also know as Deck Brightener, to lighten or remove rust or dirt. Product may need to sit on the stain for 10 - 15 minutes before rinsing.**
Oil/Grease/Food	Rinse the stain with hot water as soon as possible. Use Pour-N-Restore ®*** (*pour-n-restore.com*) as directed for any remaining stain. (Test in a small area first as Pour-N-Restore may remove some of the colorant from the decking surface.)
Mold and Mildew	Semi-annual (spring and fall) cleaning of your deck is important to prevent buildup of pollen and other debris that can support the growth of mold. Refer to Mold Technical Bulletin for specific cleaning recommendations.** ***NOTE:*** *Trex Escapes® can be effectively cleaned by using a hose and warm, soapy water with a soft bristle brush.*
Using a Pressure Washer	Trex does not recommend the use of a pressure washer. The use of a pressure washer on deck surface could damage the decking surface and **will void the warranty on standard composite and PVC products with respect to any condition caused by the pressure washing.**
Sanding	Trex does not recommend sanding. Sanding will change the appearance of the surface of Trex material and **will void the warranty with respect to any condition caused by such sanding.**
Disposal	Trex decking and railing products should be disposed with normal construction debris or household waste. **DO NOT burn Trex products.**

**Strait-Line® is a registered trademark of Irwin Industrial Tool Company.*

***Use of products containing bleach or acid will lighten the surface of Trex. Use in an inconspicuous area to determine whether you like the effect. Neither product will affect the structural integrity of Trex.*

**** Pour-N-Restore® is a registered trademark of Edgewater Industries.*

NOTE: *Trex does not recommend the placement of rubber or vinyl materials such as those in grill mats, rubber-backed welcome mats, vinyl or PVC potted containers, etc., on the surface of Trex Escapes® for extended periods of time. Over time, additives in the rubber and PVC products have a tendency to migrate from these materials to Trex Escapes, resulting in discoloration of the surface.*

MOLD TECHNICAL BULLETIN

Mold is a lower form of plant life that can settle and grow on any surface, including Trex® decking. Mildew is a form of mold that grows on damp surfaces.

Mold spores, transported by air, insects, animals, and water, are similar to seeds, but you can't see them until colonies form. Because mold adapts easily to its environments and has a large number of species, it is hard to control and impossible to eliminate totally. But it will not affect the structural performance of Trex decking.

To form visible colonies, mold needs food, moisture, and temperatures between 40° - 90°F (4°C - 32°C). Trex decking is not itself a food source but spilled dirt and debris from flowerpots and gutters can nourish mold. If the gaps between deck boards are too small or clogged, the decking can also supply moisture. *Refer to gapping instructions on page 34.*

How to Remove Mold from Trex Standard Composite and PVC Decking

All exterior building materials require cleaning. Trex is no exception. Periodic cleaning of Trex decking will remove dirt and pollen that can feed mold. If mold colonies appear, clean the deck with a commercial deck wash containing a detergent and sodium hypochlorite (bleach). The chemical will remove the mold but also lighten the wood. In some cases, it will take several treatments to remove the mold colonies. Even if the spots are no longer visible, mold spores that could re-grow may still be on the surface.

The following brands of deck cleaners are effective in removing mold:

» Olympic® Premium Deck Cleaner*

» Expert Chemical™** Composite Deck Cleaner and Enhancer (*expertchemicalinc.com*)

Always apply these products to a dry deck. Applying them to a wet deck will significantly reduce the bleach's effectiveness. **NEVER** mix any other cleaners (ammonia, phosphoric acid, etc.) with bleach.

» For a non-chlorine based alternative, you can use UltraMean®,*** but you must scrub the deck with a soft brush immediately after you apply the cleaner.

Mold spreads easily and may return in some environments despite proper cleaning and preventative measures. Mold does not damage Trex and will cause no structural harm.

How to Remove Mold from Trex Transcend®, Trex Enhance®, and Trex® Select™ Decking

If you allow debris such as pollen and dirt to remain on the deck surface, mold can feed on the biofilm. Use a hose and warm soapy water with a soft bristle brush to remove the food source and mold.

** Olympic® is a registered trademark of PPG Architectural Finishes, Inc.*

*** Expert Chemical™ is a trademark of Expert Chemical, Inc.*

**** UltraMean® is a registered trademark of Rhino Hide.*

PAINTING TECHNICAL BULLETIN

Can Trex Transcend®, Enhance®, or Select™ decking be painted or stained?

Trex Transcend, Enhance, and Select decking cannot be painted or stained.**

Can Trex Escapes® can be painted or stained?

Trex Escapes cannot be painted or stained.**

Can Trex Accents® composite decking and railing be painted or stained?

Yes, you can stain Trex Accents decking or railing to achieve a custom color, but it is not necessary for protection. Paints and stains that adhere well to wood will work as well or better with Trex Accents products. Trex Accents decking that has been faded can be stained at any time, even years after it has been installed. However you should use stain that is made for a walking surface.

What types of stains can I use on my Accents Decking?

Most stains that you would apply to wood can be applied to Trex Accents. The following companies have evaluated Trex decking and suggested these coatings:

MANUFACTURER SUGGESTED STAINS

Paint Manufacturer	Tech Support Phone Number	Suggested Coating
Behr	800-854-0133	Deck Premium Plus®** Exterior Solid Wood Deck Stain (no primer needed)
Sherwin Williams	800-474-3794	S-W Deckscapes®*** Exterior Acrylic Deck Stain A15-150 Series S-W Woodscapes®*** Exterior Acrylic Deck Stain A15 Series

Should I wait until my Trex Accents decking is faded before applying stain?

Yes, it is important to wait for Trex Accents to fade (approximately 12 - 16 weeks) before applying stain. If the Trex decking is stained before it fades, the stain could become discolored and adhesion may be compromised. The discoloration is not permanent and can be cleaned.

Once I've picked out my stain, what do I do?

This easy three-step process will guide you:

» Wait until the Trex Accents decking fades, approximately 12 - 16 weeks.

» Clean your Trex Accents decking surface. **NEVER** stain over dirty surfaces or surfaces with mold and mildew. *Refer to pages 7 - 8 for cleaning instructions.*

» Apply the stain in accordance with the manufacturer's directions.

How long will the stain on my Trex Accents deck last?

This depends on the stain, but testing has shown that stains on Trex Accents decking will last as long as or longer than stains on wood. Because Trex Accents decking absorbs minimal moisture, the stain will not experience checking or splitting.

What about cleaning my stained Trex Accents decking?

Consult your stain manufacturer's directions before cleaning.

How can I restore colorant on my Escapes® decking surface?

Through extensive testing, Trex has found a product to restore the color on PVC decking including Trex Escapes. The product is called DeckMax*****. It is made from a patent pending plant-based solution that cleans and conditions the deck. It is easy to apply by using a microfiber mop. Depending upon the region that the deck is in, it should last on the deck from 1-2 years. It is available from the manufacturer at; *www.deckmax.com* or 888-219-9411.

Can Trex Transcend® or Select™ railing be painted?

Only **Trex Transcend® white railings and Trex Select™ railing** can be painted. A high quality fast-dry Alkyd primer should be used as a base coat, with an oil or water based exterior trim paint. Only light colors should be used. No darker colors such as Black, Brown, Forest Green, as these darker colors may draw excessive heat and damage the material. Surface abrasion may promote better paint adhesion. Use something such as an abrasive pad or steel wool can be used to dull/buff the surfaces to be painted.

» Clean surfaces with Acetone, Isopropyl alcohol, or denatured alcohol before painting.

» **NEVER** use ketones (MeK, MiBk) or xylene as surface conditioners.

» Allow all surfaces to dry completely before painting.

If there is an ADA requirement for slip resistance, an appropriate type of paint with grit or grit additive can be applied. For standard Trex decking products, a product like Benjamin Moore®** Anti-Slip 116 (note this is not clear-based) or an equivalent anti-slip alternative will provide an abrasive coating to materials for ramps that must meet ADA requirements. For Transcend, Enhance, and Select decking, a latex or acrylic-based paint will not adhere but oil-based paint with grit will adhere and provide proper friction properties.*

***Premium Plus® is a registered trademark of the Behr Process Corporation.*

****Deckscapes® and Woodscapes® are registered trademarks of The Sherwin-Williams Company.*

*****Benjamin Moore® is a registered trademark of Benjamin Moore & Company.*

****** DeckMAX® is a registered trademark of DeckMAX Products.*

PHYSICAL AND MECHANICAL PROPERTIES FOR TREX TRANSCEND® AND TREX ENHANCE®

	TEST METHOD	VALUES	
Flame Spread (a)	ASTM E84	60	
	Typical Trex® Values for Coefficient of Thermal Expansion/Contraction (36" (91.4 cm) long samples)		
Thermal	Width	35.2 x 10-6 to 42.7 x 10-6 (inch/inch/°F) 644 x 10-6 to 776 x 10-6 (length/length/°C)	
	Length	16.1 x 10-6 to 19.2 x 10-6 (inch/inch/°F) 297 x 10-6 to 356 x 10-6 (length/length/°C)	
Moisture	Typical Trex Values for Long-Term Water Immersion	Typical Trex Values for Constant High Humidity	
	(36"/91.4 cm long samples)	(6"/15.2 cm long samples)	
	Width ~3%	~1%	
Nail Withdrawal	ASTM D1761	163 lbs/in (1.12 Mpa)	
Screw Withdrawal	ASTM D1761	558 lbs/in (3.85 Mpa)	
Fungus Resistance (White & Brown Rot)	ASTM D1413	Rating = No Decay	
Termite Resistance (c)	AWPA E1-72	Rating = 9.6	
		ULTIMATE (TYPICAL) VALUES	DESIGN VALUES
Compression Parallel (d)(e)	ASTM D198	836 psi (5.76 Mpa)	540 psi (3.72 Mpa)
Compression Perpendicular (d)(f)	ASTM D143	861 psi (5.94 Mpa)	540 psi (3.72 Mpa)
Tensile Strength (d)	ASTM D198	1562 psi (10.77 Mpa)	500 psi (3.45 Mpa)
Shear Strength (d)	ASTM D143	559 psi (3.85 Mpa)	360 psi (2.48 Mpa)
Modulus of Elasticity (d)	ASTM D4761	412,000 psi (2840.64 Mpa)	200,000 psi (1378.95 Mpa)
Thermal Conductivity	ASTM C177	1.57 BTU-in/hr-ft @85°F (.0023 W/cm/°C)	

NOTES:
(a) Corresponding Smoke Developed Index is 300.
(b) Values shown are for reference only. These values should not be used to calculate gapping for Trex. Follow Trex installation literature for proper width-to-width and end-to-end gapping information.
(c) Material weight loss was 0%.
(d) Ultimate strength values are not meant for design analysis. Testing performed on a 1" x 5.5" (2.5 cm x 14 cm) cross section. Design values are for temperatures up to 130°F (54°C).
(e) Compressive strength parallel to the length.
(f) Compressive strength perpendicular to length.

FOR TREX® SELECT™ DECKING PHYSICAL AND MECHANICAL PROPERTIES, REFER TO WWW.TREX.COM FOR MORE DETAILS.

PHYSICAL AND MECHANICAL PROPERTIES FOR TREX ACCENTS®

	TEST METHOD	VALUES	
Abrasion Resistance	ASTM D2394	.01 wear/1000 revs.	
Hardness	ASTM D143	562 kg (5 kn)	
Self-Ignition Temperature	ASTM D1929	743°F (395°C)	
Flash-Ignition Temperature	ASTM D1929	698°F (370°C)	
Flame Spread (a) [Fire Defense]™	ASTM E84	80 [40]	
Water Absorption (sanded surface) 24 hr. immersion	ASTM D1037	4.3%	
Water Absorption (unsanded surface) 24 hr. immersion	ASTM D1037	1.7%	
	Typical Trex® Values for Coefficient of Thermal Expansion/Contraction (36" (91.4 cm) long samples)		
Thermal	Width	35.2 x 10-6 to 42.7 x 10-6 (inch/inch/°F) 644 x 10-6 to 776 x 10-6 (length/length/°C)	
	Length	16.1 x 10-6 to 19.2 x 10-6 (inch/inch/°F) 297 x 10-6 to 356 x 10-6 (length/length/°C)	
Moisture	Typical Trex Values for Long-Term Water Immersion	Typical Trex Values for Constant High Humidity	
	(36"/91.4 cm long samples)	(6"/15.2 cm long samples)	
	Width ~3%	~1%	
Nail Withdrawal	ASTM D1761	163 lbs/in (1.12 Mpa)	
Screw Withdrawal	ASTM D1761	558 lbs/in (3.85 Mpa)	
Static Coefficient of Friction - Dry (c)/Wet (c)	ASTM F1679	0.62/0.70	
Fungus Resistance (White & Brown Rot)	ASTM D1413	Rating = No Decay	
Termite Resistance (d)	AWPAE1-72	Rating = 9.6	
Specific Gravity (typical)	ASTM D2395	>0.96	
		ULTIMATE (TYPICAL) VALUES	DESIGN VALUES
Compression Parallel (e)(f)	ASTM D198	1806 psi (12.45 Mpa)	550 psi (3.79 Mpa)
Compression Perpendicular (e)(g)	ASTM D143	1944 psi (13.40 Mpa)	625 psi (4.31 Mpa)
Tensile Strength (e)	ASTM D198	854 psi (5.89 Mpa)	250 psi (1.72 Mpa)
Shear Strength (e)	ASTM D143	561 psi (3.87 Mpa)	200 psi (1.38 Mpa)
Modulus of Rupture (e)	ASTM D4761	1423 psi (9.81 Mpa)	250 psi (1.72 Mpa)
Modulus of Elasticity (e)	ASTM D4761	175,000 psi (1206 Mpa)	100,000 psi (689.48 Mpa)
Thermal Conductivity	ASTM C177	1.57 BTU-in/hr-ft @85°F (.0023 W/cm/°C)	
Leachate (h)	TCLP-EPA 1311	Pass	

NOTES:
(a) Corresponding Smoke Developed Index is 285.
(b) Values shown are for reference only. These values should not be used to calculate gapping for Trex. Follow Trex installation literature for proper width-to-width and end-to-end gapping information.
(c) ASTM F1679 test conducted on sanded/unsanded weathered samples with neolite surface.
(d) Material weight loss was 0%.
(e) Ultimate strength values are not meant for design analysis. Testing performed on a 1" x 5.5" (2.5 cm x 14 cm) cross section. Design values are for temperatures up to 130°F (54°C).
(f) Compressive strength parallel to the length.
(g) Compressive strength perpendicular to length.
(h) Leaching was below levels established by EPA for all constituent categories.

GLOSSARY OF TERMS

Standard Composite	Trex Accents®
PVC	Trex Escapes®
High Performance Composite	Trex Transcend®, Trex Enhance®, Trex® Select™

Baluster	One of a number of closely spaced supports for a railing.
Baluster Spacer	A piece that snaps into top and bottom rail that gives precise spacing to the balusters.
Bird's Mouth Gasket	A 45° corner cut gasket to be used when attaching railing to the corner of a 4" x 4" (10.2 cm x 10.2 cm) post sleeve.
Bump Stop Tab	Part of the connector clip and allows for 1/4" (0.6 cm) spacing between decking boards.
Carriage Bolt	A bolt with a rounded head and a square shoulder under the head to prevent turning during installation.
Connector Clip	Hidden fastener used between deck boards to secure positioning.
Fascia	Horizontal trim board used to cover rim and end joists. May also be used for stair risers.
Foot Block	Provides support for the bottom rail and gives a finished appearance.
Joist	A horizontal structural pressure-treated board that runs from wall-to-wall, wall-to-beam, or beam-to-beam to support the deck floor and decking materials.
Lag Bolt	A large metal fastener with a hex head and screw threads that drive it into the wood.
Ledger Board	A beam supporting one end of the joists.
Nosing	The rounded front edge of a stair tread.
Pan-head Screw	Self-tapping screw with W-cut design and slightly rounded head.
Pergola	A horizontal trellis or framework, supported on round or square posts, that can carry climbing plants and provides limited cover from sunshine. It may form a covered walk.
Post Sleeve	Formed sleeve that fits over a standard pressure-treated 4x4 post.
Post Sleeve Cap	Attractive flat or pyramid shaped cap to place on top of post sleeve.
Post Sleeve Skirt	Decorative skirt that surrounds the bottom of the post and rests on surface of deck.
Rail Gasket	A gasket used to fill the gap between the railing and post.
Rail Light	Light that attaches to side of post sleeve.
Rail Support Bracket (RSB)	Innovative bracket designed for horizontal, angled, and stair railing installations.
Recessed Light	Light that is recessed so it sets flush with decking surface.
Rim Joist	A joist on either side or the end of the deck. May have stairs attached and typically opposite of the ledger board.
Riser	The vertical board nailed to a stringer.
Riser Light	Light that attaches to stair riser.
Scarf Cut	A joint used to join two pieces of decking end-to-end, usually cut at a 45° angle.
Screw Plug	A small plug to cover a screw.
Self-tapping Screw	A fastener that taps and drills its own hole and does not require a pre-drilled hole.
Shim	A wedge that is placed between two surfaces to fill in the gap.

Stair Tread	Steps or stairway boards that are the steps.
Start Clip	Metal clips used at the end of decking boards to secure them in position.
Stringer	The structural member in a stairway that supports the treads and risers.
Tempered Glass	A safety glass that is four to five times stronger than standard glass made by a process of extreme heating and cooling.
Toenailing	Attaching two pieces of decking together by driving a nail at an angle through one piece into the other.
Universal Fastener	Plastic 1/4″ (0.6 cm) self-gapping hidden fastener that has increased durability and allows for easier and faster installation than traditional fasteners.
Wall Return Fitting	A fitting that can attach directly to wall or post.
Weather Stripping	A self-adhesive strip applied to the glass panel option to create a tight fit with top and bottom rails.

PLANNING AHEAD

PLANNING AHEAD

Trex® Decking:

» When installing Trex Transcend® Tropical Colors of Spiced Rum, Lava Rock, and Tiki Torch, it is a good idea to mix and match all of the boards on the job site prior to installation to ensure an appealing mix of light and dark tones.

Railing (Including ADA Handrail):

» First, pick the railing style you want.

» Calculate your spanning based on the railing you chose.

» Determine the number of balusters you will need based on the railing you choose. *See page 50.*

NOTE: Trex railings are made to be installed at maximum of 6' (1.82 m) or 8' (2.44 m) on center (depending upon type of railing you choose). Trex railings are not true 6' (72") or 8' (96") in length.

» Determine post locations prior to installing any decking. In most cases, posts are usually installed before decking is installed.

» Confirm with your local building official if ADA Handrail is required, and if so plan spanning for posts accordingly to allow for attachment of Trex ADA Handrail. ADA Handrail requires a span of 6′ OC for posts.

» Grill placement: A good recommendation to help prevent damage to your railing is to not have a grill too close to your railing. Allow for ample airspace between the back/sides of your grill to help prevent charring or staining to the railing.

See pages 55 - 72 for Transcend railing installation, pages 73-80 for Select™ railing installation, pages 81 - 90 for Designer railing installation, pages 91 - 101 for Traditional railing installation, and pages 102 - 105 for ADA Handrail installation.

Trex Lighting:

» Plan locations of lights, power supply, timer, and dimmer. These should be accessible for service if necessary.

» Install wiring before decking and railing have been installed.

» **DO NOT** run wires between joists and deck boards.

See pages 20 - 25 for Trex® DeckLighting™ installation.

Trex® RainEscape® Deck Drainage System:

» Plan ahead for deck layout to allow for proper placement of Trex RainEscape within the joist system.

» Make sure joists are straight and square.

See www.trex.com for more information on Trex RainEscape recommendations and installation. Trex RainEscape is manufactured and distributed by Dri-Deck Enterprises, LLC, under a trademark license with Trex Company, Inc.

Installing Hot Tubs, Planters, and Seating:

» Plan ahead proper joist spanning if required (this is especially important if installing a hot tub).

» *Refer to page 33 for Trex Decking Span Chart for specific loads.*

Call 1-800-BUY-TREX for detailed questions.

Installing Fireplaces and/or Fire Pits With Trex Decking:

» Determine if fire will be gas or wood burning (***NOTE:*** *Most fire pits shown in Trex ads are gas burning*).

» For gas, the fire pit is installed by cutting around the Trex decking. **It is not to be installed on top of Trex decking.** A fire resistant material is installed under the fire pit and a protective "wall" made from stone or other fire resistant material is installed to hold fire pit in place and also protect the decking from heat.

» For wood, fire pits are not recommended on top of Trex decking unless using a product called DeckProtect®. Wood burning fire pits can damage the decking due to extreme heat from the bottom of the fire pit and/or burning embers "shooting" onto the decking. DeckProtect® was tested on all Trex decking and there were no issues with burning of the decking surface when placed directly under a standard size portable fire pit along with the accompanying rack (***NOTE:*** *Rack is not available for all sizes, so check with manufacturer first for verification*). Trex does recommend that the

DeckProtect® padding/rack be moved from time to time for general cleaning underneath. It should be noted that even when using DeckProtect®, burning embers could "shoot" beyond the protective mat and burn the deck.

For more information about this product, please visit their website at *www.deckprotect.net* or call 1-800-BUY-TREX. DeckProtect® is a registered trademark of Infinite Heat Solutions.

Installing a Pergola on Trex Decking:

» Keep in mind if you are planning to install a Trex®Pergola™ on your deck, you will need access to the underside of the deck. Trex Pergola mounts with a 10″ x 10″ (25.4 cm x 25.4 cm) aluminum plate on the underside of the deck, creating a clamping effect on both the top and bottom of the deck for maximum strength. If installed, water barriers and any underdeck coverings will have to be removed to properly install the pergola posts.

» You need to consider the location of your pergola posts in respect to joists. However, you do not have to mount your plates between joists. It is possible to place blocks on the bottom of the joists and mount the Trex Pergola brackets through the blocks.

Trex Pergola products are manufactured and sold by Home & Leisure, Inc., d/b/a Backyard America under a trademark license with Trex Company, Inc.

Special Patterns

When planning a unique pattern, you will need to adjust the framing to support the surface pattern. *Refer to the span and gapping charts on pages 33 and 34.* Many decks are designed to take advantage of angles, as shown below.

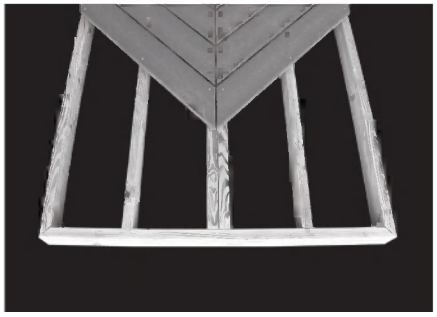

Herringbone Pattern

Tile Pattern

Picture Frame Pattern

NOTES

LIGHTING

TREX® DECKLIGHTING™ SPECIFICATIONS AND PROFILES

LIGHTING	DESCRIPTION	ITEM NUMBER	COLORS
Pyramid Post Cap Light	» 4" x 4" (10.2 cm x 10.2 cm) LED Post Cap Light » 2 Gel-filled Wire Nuts	XXPYLEDCAP4X4	BK, WT, FP, TH, VL, GP, RS
Flat Post Cap Light	» 4" x 4" (10.2 cm x 10.2 cm) LED Post Cap Light » 2 Gel-filled Wire Nuts	XXSQLEDCAP4X4	BK, WT, FP, TH, VL, GP, RS
Deck Rail Light	» LED Deck Rail Light, 2.75" (6.99 cm) OD » 2 Gel-filled Wire Nuts	XXLAMPLED	BK, WT, BZ
LED Riser 4-Pack	» 4 LED Riser Lights, 1.25" (3.18 cm) OD » 8 Gel-filled Wire Nuts ***NOTE:*** *Wire not included with kit.*	XXRISERLED4PK	BK, WT, BZ
Recessed Deck Light 4-Pack	» 4 LED Recessed Lights, 1" (2.54 cm) OD » 8 Gel-filled Wire Nuts ***NOTE:*** *Wire not included with kit.*	RECESSLED4PK	
Starter Kit 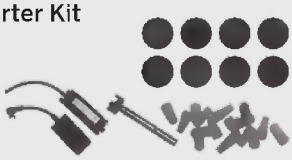	» 8 LED Riser Lights, 1.25" (3.18 cm) OD » Transformer (60W) » Timer » 16 Gel-filled Wire Nuts » Forstner Bit ***NOTE:*** *Wire not included with kit.*	XXRISERLEDSK	BK, WT, BZ
Transformer with Timer	» Output Voltage: 12VDC » Output Power: 60W or 30W » Output Current: 5A or 2.5A » Photo-activated Timer	5A, 60W: DLTRANSFORMER 2.5A, 30W: 2.5DLTRANSFORMER	
Dimmer	» Single Channel with Remote	DLDIMMER	

TREX™ DECKLIGHTING™ ACCESSORIES	DESCRIPTION	ITEM NUMBER
Forstner Bit	1" (2.54 cm) bit, pack of 6	DLBIT6PK
Gel-filled Wire Nuts	Pack of 10	DLWIRENUT10PK
8 GA/2 Wire	100 ft. (30.48 m) spool	DLWIRE100FT

XX = INSERT COLOR PREFIX: **BK** Black (Smooth or Hammered) **BZ** Bronze (Hammered) **FP** Fire Pit **GP** Gravel Path **RS** Rope Swing **SR** Spiced Rum **TH** Tree House **VL** Vintage Lantern **WT** Classic White (Smooth or Hammered)

HOW TO INSTALL TREX® DECKLIGHTING™

PARTS

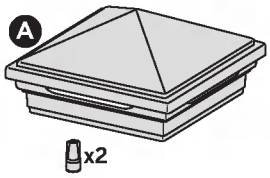

Pyramid Post Cap Light

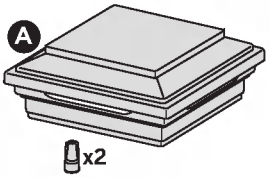

Flat Post Cap Light

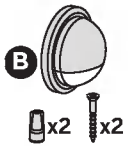

Deck Rail Light

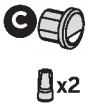

Riser Light

Recessed Deck Light

TOOLS NEEDED

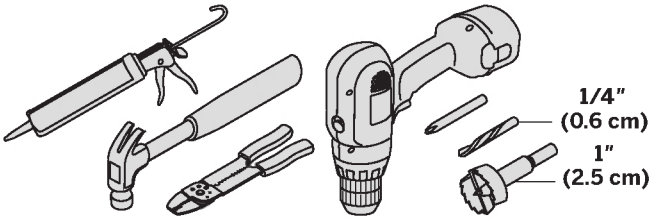

HELPFUL TIPS

- Leave slack in wire to make fixture terminations.
- Recessed lights work well spaced 4′ (1.22 m) to 6′ (1.83 m) on center around parameter of deck.
- Deck rail lights work well at changes in levels of a deck—at the top or the bottom of the stairs, or in place of post cap lights.
- Riser lights should be placed giving considerations to local codes. If codes do not exist, access adequate number and placement via darkness evaluation prior to drilling.
- Drill holes perpendicular to the surface, being careful to hold drill steady, to avoid producing an enlarged hole. If hole is enlarged, light fixture will have a loose fit. Use of a flexible outdoor semi-permanent adhesive (silicone caulk) may be required to anchor light in place.
- Riser and deck rail holes can be through holes. However, recessed light holes should be drilled to a depth of 3/4″ (1.9 cm). Over-drilled recessed light holes will require use of silicone caulk to anchor light in place.

Lighting and Wiring Overview

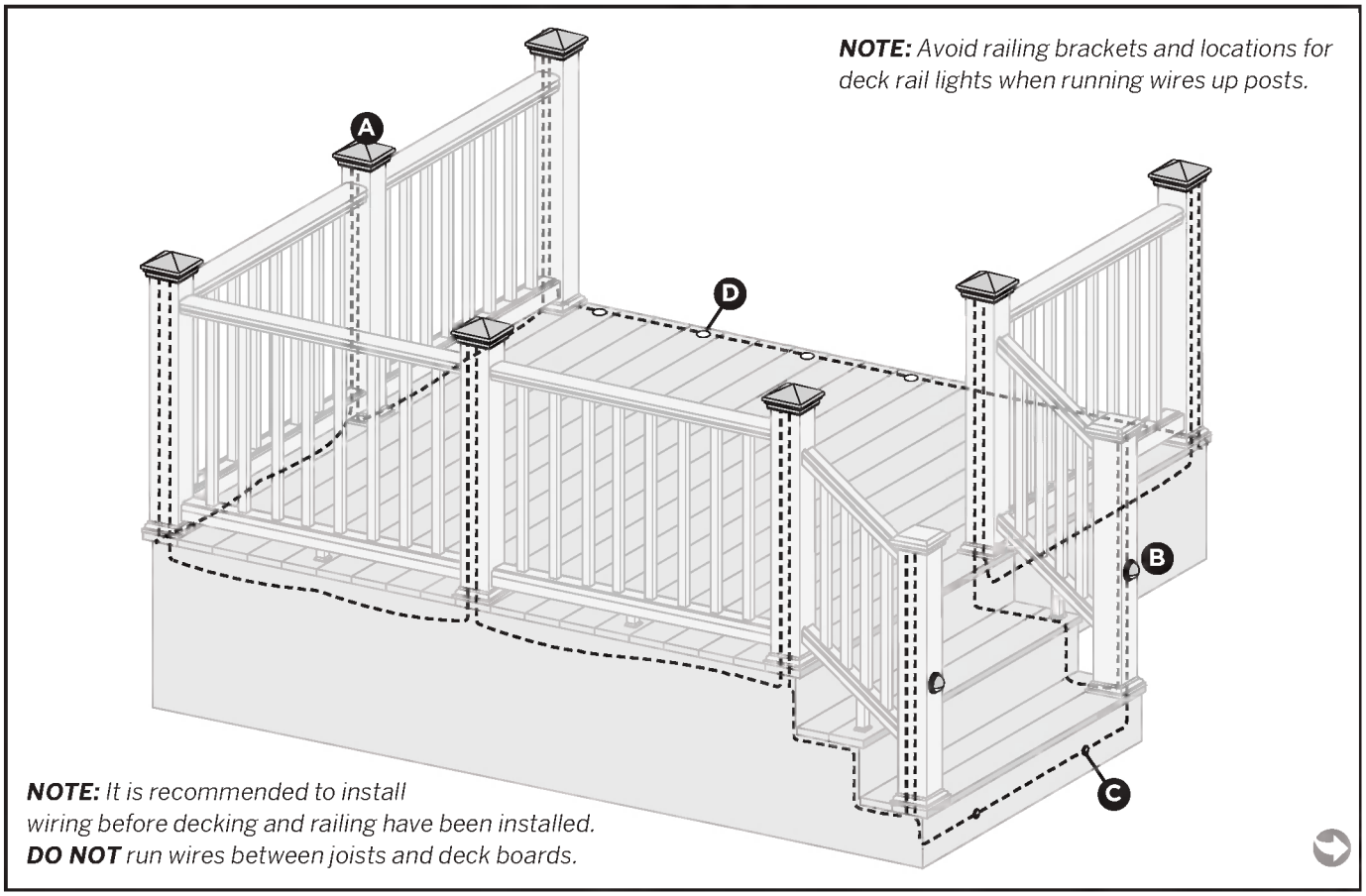

NOTE: *Avoid railing brackets and locations for deck rail lights when running wires up posts.*

NOTE: *It is recommended to install wiring before decking and railing have been installed.* ***DO NOT*** *run wires between joists and deck boards.*

General Information

» **ALWAYS** consult local codes before beginning a project.
» Straight runs over 100′ (30.5 m) may require larger wire such as 16 or 14 gauge.
» **USE TREX TRANSFORMER ONLY. Use of any other transformer voids warranty.**

TRANSFORMER CAPACITY BY TYPE

Type of Light	5A Transformer (DL TRANSFORMER)	2.5A Transformer (2.5 DL TRANSFORMER)
Riser Light	240	120
Recessed Light	120	60
Post Cap	60	30
Deck Rail Light	240	120

Above listing is for maximum number of each individual types of lights. If mixing and matching lighting, contact Trex to determine if more than on transformer is required.

Planning

NOTE: *When designing your deck, plan locations of lights, power supply, timer, and dimmer. These should be accessible for service. Installing a GFCI outlet is highly recommended to help prevent damage to lighting from electrical surges.*

1. The dimmer remote will work in a 30′ (9 m) radius of the unit.
2. Dimmer must be installed in a dry location. Keep dimmer remote ID # in a safe place in case a replacement remote is needed.
3. Timer must be installed vertically with receptacle facing downwards and not reaching ground level. Timer must be in view of the sun to use the dusk/dawn feature.

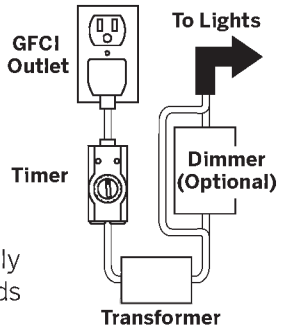

Installing Wiring

NOTE: *It is recommended to install wiring before decking and railing have been installed.*

» Use 18 gauge stranded outdoor wire (available from Trex) to connect wires from each light.

1. Wiring must be run under decking structure and behind stringers. **DO NOT** run wires between deck boards and joists. Staple to frame with cable staples at least 1/4″ (0.6 cm) wide. **DO NOT** crush wire insulation with staple.

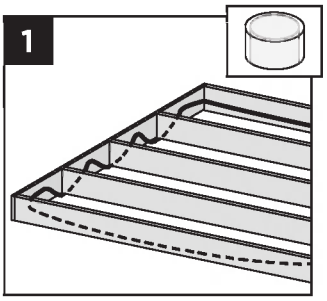

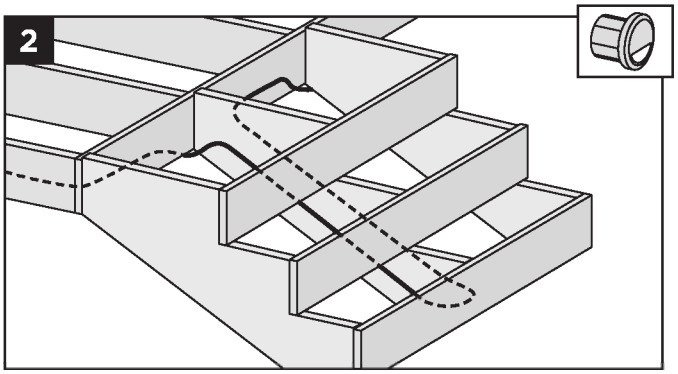

2. Wiring can be run under deck and behind risers. Staple to frame with cable staples at least 1/4″ (0.6 cm) wide. **DO NOT** crush wire insulation with staple.

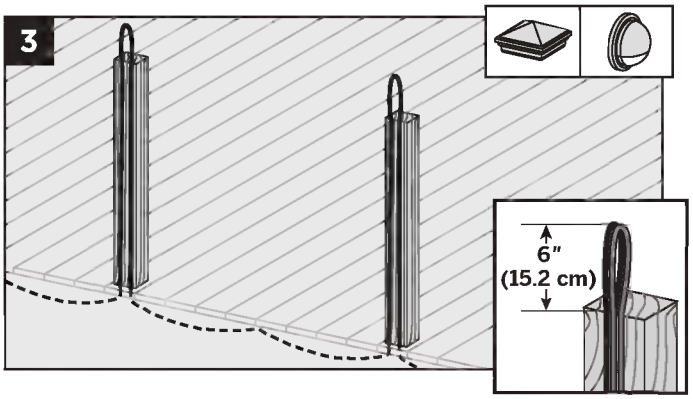

3. Run wire up outside of each post that will have either a post cap light or a deck rail light. Avoid running wire on side of post where railing brackets or deck rail lights will be installed. Leave a 6″ (15.2 cm) loop at top to make connections. Staple to frame and posts with cable staples at least 1/4″ (0.6 cm) wide. **DO NOT** crush wire insulation with staple.

NOTE: *After installing wiring, finish installing your Trex decking and railing by following the Trex Installation Guide.*

Making Connections

» Polarity must be maintained through wiring system. Always attach the same side of the 18 gauge wire to red wires on the lights. Red wires are positive.
» Wire nuts supplied by Trex are gel-filled and waterproof. These wire nuts can safely attach four wires.

1. Strip wires to 5/8″ (1.6 cm). Align any frayed strands of conductors. Pre-twisting is unnecessary.

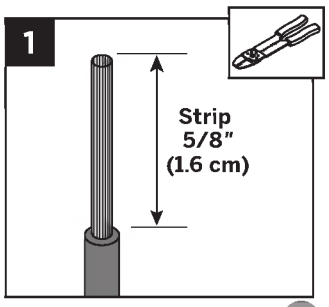

2. Place stripped wires together with insulation even. Twist connector onto wires pushing firmly until hand-tight. **DO NOT** over torque. Wipe sealant in and around conductors and connector opening while tightening. **DO NOT** reuse.

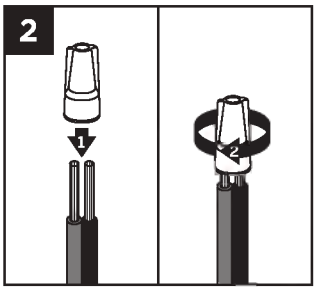

Timer Operation Instructions

1. Select the mode of operation:
   - » Dusk to Dawn
   - » 1 - 8 hours
   - » Always "ON"
   - » "OFF"

Program repeats daily. When power is flowing to lights, green light above POWER is on.

Installing Post Cap Lights

NOTE: *Install post cap lights after the railing system, post sleeve skirt, and post sleeve have been installed.*

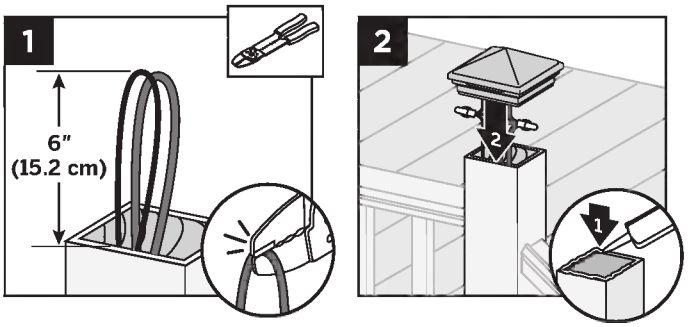

1. Cut wire loop at top of post. Strip wire ends. Make connections with provided wire nuts. *See Making Connections on page 23.*
2. After verifying wiring is correct by turning lights on, attach cap to top of post with silicone caulk.

Installing Deck Rail Lights

NOTE: *Install deck rail lights after the railing system, post sleeve skirt, and post sleeve have been installed.*

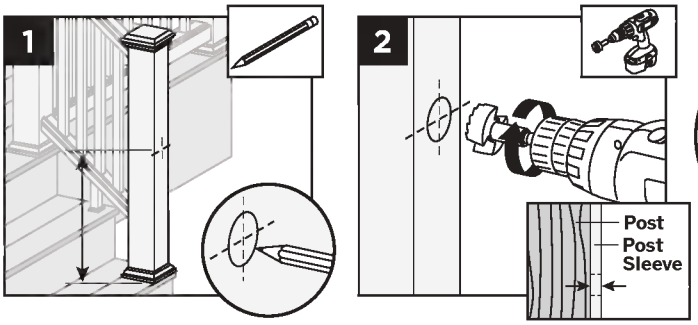

1. Mark desired height, centered on post sleeve for deck rail light location.
2. Drill a 1" (2.5 cm) hole through post sleeve. Use care to stop drill before cutting into post.

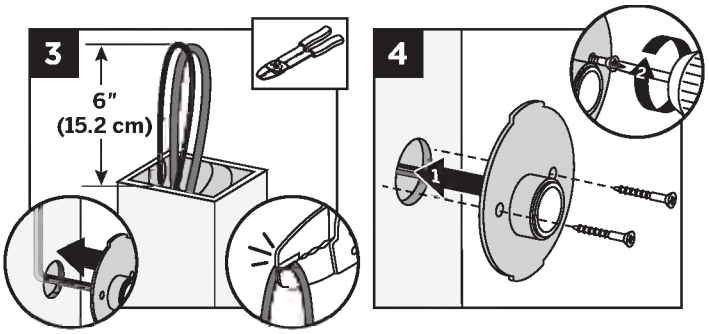

3. Fish wire from deck rail light through hole and up to top of post. Cut wire loop at top of post. Strip the two wire ends. Make connections with provided wire nuts. *See Making Connections on page 23.*
4. Push back housing and wires into hole. Align holes for screws vertically and attach fixture base to post with provided screws as indicated above.

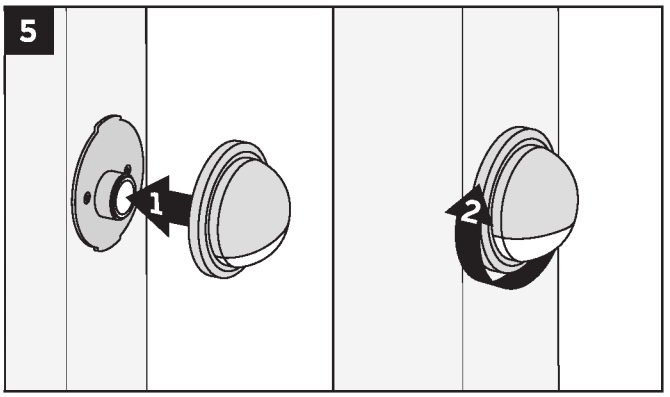

5. Line up polycarbonate lens with fixture housing. Twist onto fixture base.

Installing Riser Lights

NOTE: *Install riser lights after stair and risers have been installed.*

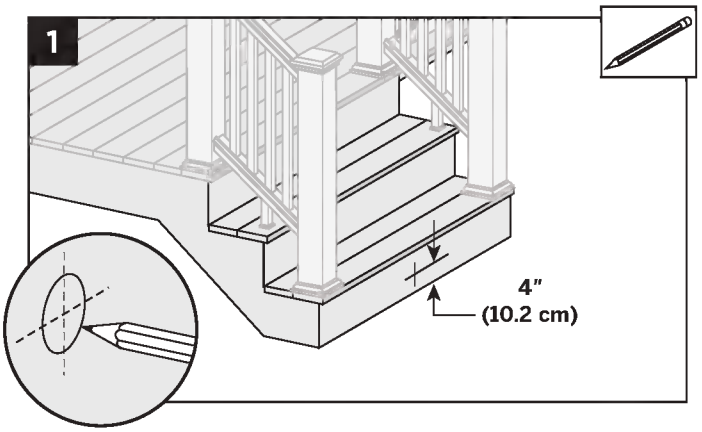

1. Mark locations for each light, generally 4" (10.2 cm) above tread. Consult local codes for lighting requirements.

NOTE: *If possible, avoid locations over stringers as holes will be more difficult to create.*

Installing Riser Lights *(continued)*

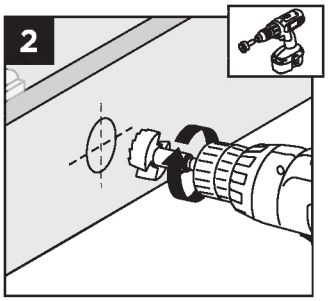

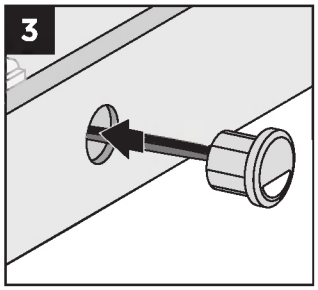

2. Drill a 1″ (2.5 cm) diameter hole at least 1″ (2.5 cm) deep into riser. If riser material is thicker than 1″ (2.5 cm), use a 1/4″ (0.6 cm) drill bit to create a passage for wires.
3. Thread wires through hole.
4. Press light into hole, ensuring lens is horizontal. Make connections behind stairs with provided wire nuts. *See Making Connections on page 23.*

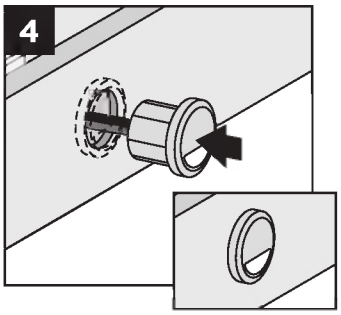

***NOTE: DO NOT** install Riser Light or Deck Rail Light into top or bottom rails or balusters.*

Installing Recessed Deck Lights

***NOTE:** Install recessed deck lights after installing decking.*

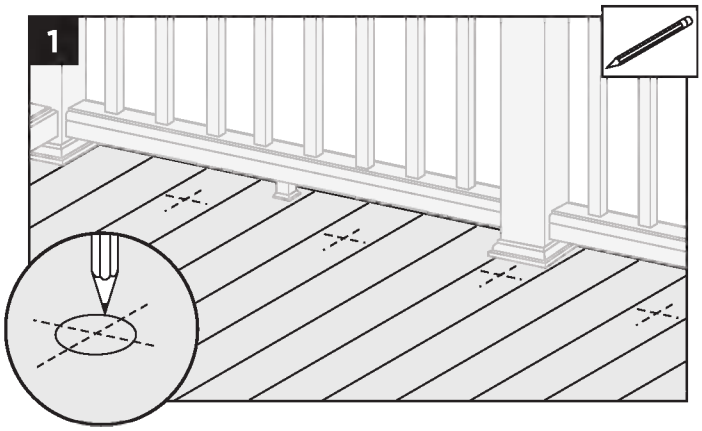

1. Mark locations for lights in deck boards.

***NOTE:** If possible, avoid locations over joists as holes will be more difficult to create.*

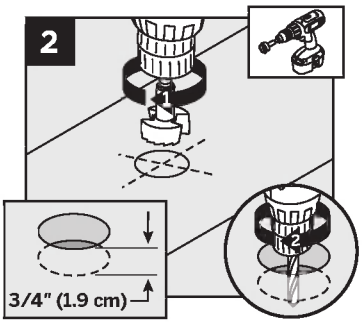

2. Drill a 1″ (2.5 cm) diameter hole 3/4″ (1.9 cm) deep into deck board. Hole cannot go all the way through deckboard or light will fall through. Make sure drill bit is perpendicular to board. Drill a 1/4″ (0.6 cm) diameter hole in base of the first hole through deck board.

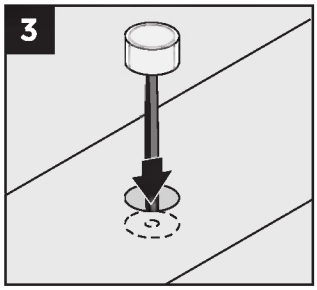

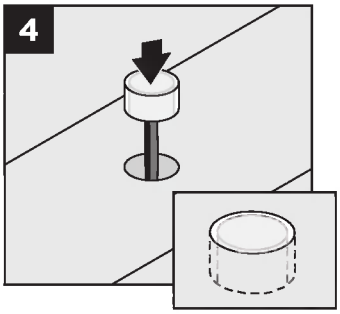

3. Thread wires through hole. **DO NOT pull LED into hole by pulling on wires. This may damage wires or LED.**
4. Press light into hole until flush with surface. Make connections under deck with provided wire nuts. *See Making Connections on page 23.*

DECKING

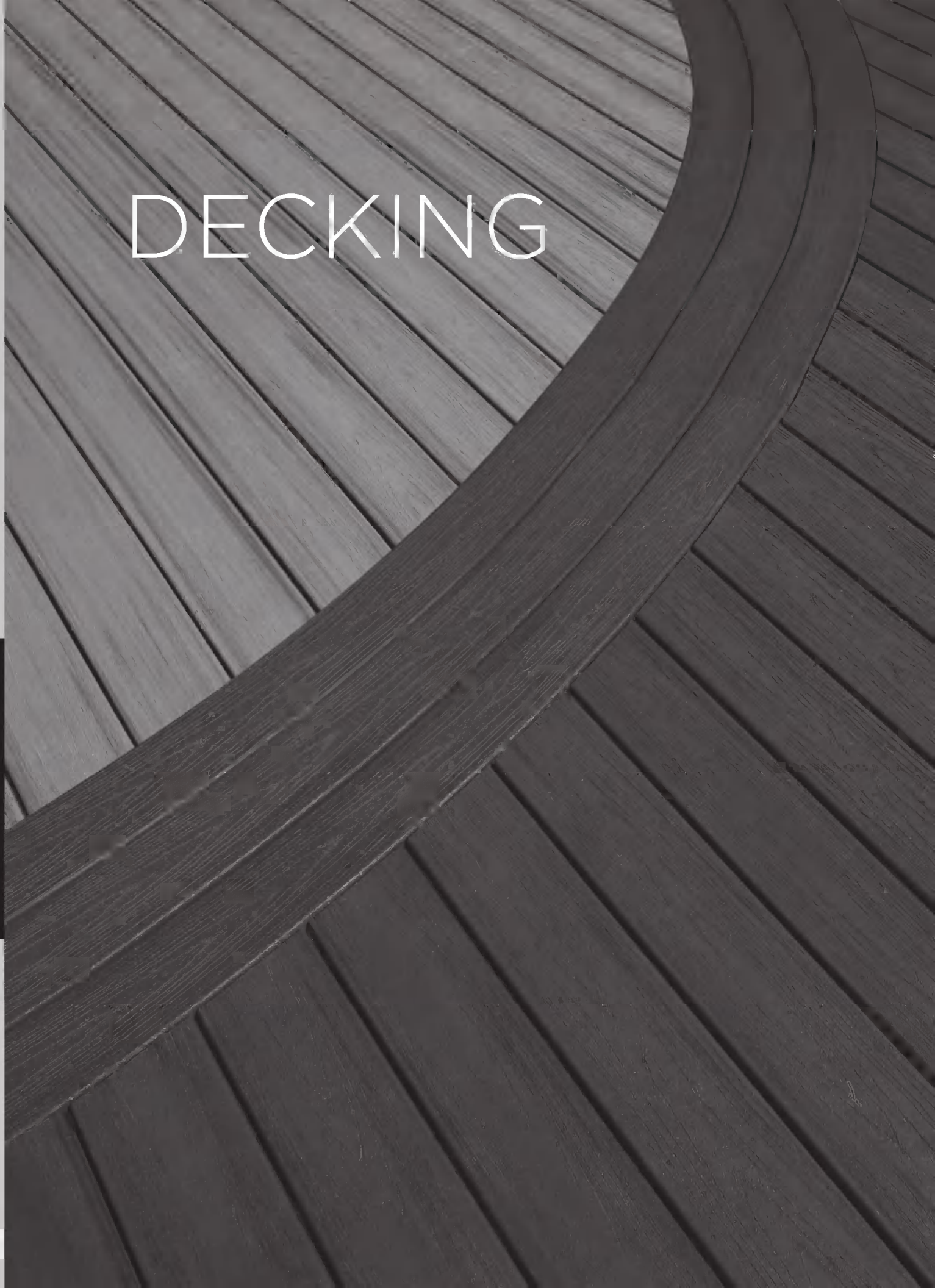

DECKING SPECIFICATIONS AND PROFILES

DECKING	DESCRIPTION		ITEM NUMBER	COLORS
1" x 6" (2.5 cm x 15.2 cm) Square Edge Board Actual Dimensions: 1" x 5.5" (2.5 cm x 14 cm) Select Decking Actual Dimensions: .875 x 5.5" (2.2 cm x 14 cm) 	12' (3.66 m)	Transcend	XX010612TS48	LR, SR, TT, FP, GP, RS, TH, VL
	16' (4.88 m)	Transcend	XX010616TS48	
	20' (6.1 m)	Transcend	XX010620TS48	
	12' (3.66 m)	Enhance	XX010612ES48	BD, CS
	16' (4.88 m)	Enhance	XX010616ES48	
	20' (6.1 m)	Enhance	XX010620ES48	
	12' (3.66 m)	Select	XX010612SS 64	MB, SD, WG, WB
	16' (4.88 m)	Select	XX010616SS 64	
	20' (6.1 m)	Select	XX010620SS 64	
	12' (3.66 m)	Accents	XX010612AS48	MB, SD, WG, WB
	16' (4.88 m)	Accents	XX010616AS48	
	20' (6.1 m)	Accents	XX010620AS48	
1" x 6" Grooved-Edge Board Actual Dimensions: 1" x 5.5" (2.5 x 14 cm) 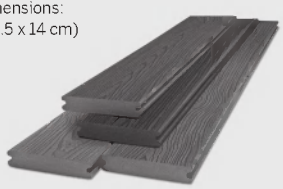	12' (3.66 m)	Transcend	XX010612TG48	LR, SR, TT, FP, GP, RS, TH, VL
	16' (4.88 m)	Transcend	XX010616TG48	
	20' (6.1 m)	Transcend	XX010620TG48	
	12' (3.66 m)	Enhance	XX010612EG48	BD, CS
	16' (4.88 m)	Enhance	XX010616EG48	
	20' (6.1 m)	Enhance	XX010620EG48	
	12' (3.66 m)	Accents	XX010612AG48	MB, SD, WG, WB
	16' (4.88 m)	Accents	XX010616AG48	
	20' (6.1 m)	Accents	XX010620AG48	
1" x 4.5" Grooved Porch Floor Board Actual face dimensions: 1" x 4.25" (2.5 cm x 10.8 cm) Actual Dimensions: 1" x 4.5" (2.5 cm x 11.4 cm) 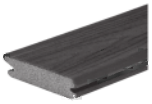 **Can also be used for decking applications.**	10' (3.05 m)	Transcend Porch	XX010510TP60	FP, GP, SR
	12' (3.66 m)	Transcend Porch	XX010512TP60	
	16' (4.88 m)	Transcend Porch	XX010516TP60	
2" (5.1 cm) Square Edge Board Actual Dimensions: Transcend 2x4: 1.375" x 3.5" (35 mm x 89 mm) Transcend 2x6: 1.375" x 5.5" (35 mm x 140 mm) Accents 2x6: 1.5"x 5.5" (38 mm x 140 mm) 	2 x 4 x 16'	Transcend	XX020416TS48	FP, GP, TH, VL
	2 x 6 x 16'	Transcend	XX020616TS32	
	2 x 6 x 20'	Transcend	XX020620TS32	
	2 x 6 x 16'	Accents	XX020616AS72	MB, SD, WG, WB
	2 x 6 x 20'	Accents	XX020620AS72	
1" x 8" (2.5 cm x 20.3 cm) Fascia Actual Dimensions: .75" x 7.25" x 12' (1.9 cm x 18.4 cm x 3.66 m) 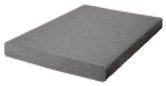 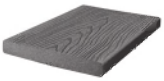	12' (3.66 m)	Transcend	XX010812TS60	LR, SR, TT, FP, GP, RS, TH, VL
	12' (3.66 m)	Enhance	XX010812ES60	BD, CS
	12' (3.66 m)	Select	XX010812SS60	MB, SD, WG, WB
	12' (3.66 m)	Universal	WW010812ES60	WHITE
1" x 12" (2.5 cm x 30.5 cm) Fascia Actual Dimensions: Transcend/Enhance/Smooth .75" x 11.375" x 12' (1.9 cm x 28.9 cm x 3.66 m) Escapes .5" x 11.25" x 12' (1.27 cm x 28.6 cm x 3.66 m) 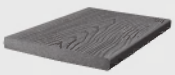	12' (3.66 m)	Transcend	XX011212TS40	LR, SR, TT, FP, GP, RS, TH, VL
	12' (3.66 m)	Enhance	XX011212ES40	BD, CS
	12' (3.66 m)	Select	XX011212SS40	MB, SD, WG, WB
	12' (3.66 m)	Universal	WW011212ES40	WHITE

XX = INSERT COLOR PREFIX: **BD** Beach Dune **CS** Clam Shell **FP** Fire Pit **GP** Gravel Path **LR** Lava Rock **MB** Madeira **RS** Rope Swing **SD** Saddle **SR** Spiced Rum **TH** Tree House **TT** Tiki Torch **VL** Vintage Lantern **WB** Woodland Brown **WG** Winchester Grey

DECKING SPECIFICATIONS AND PROFILES

TREX HIDEAWAY® HIDDEN FASTENING SYSTEM	DESCRIPTION	ITEM NUMBER
Connector Clip (stainless steel)	50 sq. ft. box	CONNECTCLIP
	500 sq. ft. bucket	CLIPPAIL
Gun Pail	500 sq. ft. (46.5 m²) bucket with collated pneumatic screws	GUNCLIP
Start Clip (stainless steel)	400 sq. ft. bag	STARTERCLIP
Elevations Start Clip (stainless steel)	400 sq. ft. (37 m²) bag—Elevations	ELVSTARTCLIP
Universal Fastener (glass-filled nylon)	50 sq. ft. box	UNIVCONCLIP
	500 sq. ft. bucket	DA00002
Elevations Universal Connector Clip (glass-filled nylon)	50 sq. ft. (46.5 m²) box—Elevations	ELVUNIVCLIP
Router Bit	Router Bit	ROUTBIT

DECKING

XX = INSERT COLOR PREFIX: **FP** Fire Pit **GP** Gravel Path **SR** Spiced Rum

DECKING FASTENERS

	TREX® PRODUCT LINES				
	Transcend®	Enhance®	Select®	Accents®	Escapes®
Trex Hideaway® Hidden Fastener	X	X	X	X	X
FastenMaster® TrapEase II Composite Screw	X	X	X	X	
Quick Drive® Composi-Lok Deck Screw				X	
UFO Ballistic NailScrews®				X	
Dexxter® Composite Screw – 6 Lobe Drive Only	X	X	X	X	
Fastenmaster® TrimTop Screw					X
Scrudini™ Hand Drive Screws					X
Camo® Marksman Pro®					X
DeckFast® Cap-Tor® xd/ HeadCote® CapTor® xd	X	X	X	X	X
Screw Product C-Deck Exterior Star Drive Composite Deck Screw *	X	X	X	X	X
C-Deck Exterior Star Drive Composite Deck Screw (See note below)	X	X	X		
Phillips II Plus® Pozisquare	X	X	X		
Cortex® Conceled Fasteners	X	X	X	X	
Muro® T-Screw Torx Stainless Steel Screw - Collated (M-TX0300SEP)	X	X	X	X	

NOTE: *C-Deck screw listed above is also color matched for use with white Trex 1x8 and 1x12 composite fascia.*

NOTE: *Muro T-Screw listed above is approved for 2x6 decking (can also be used with standard 1" decking as listed above). This screw is collated and can be used with Muro Auto Feed Screw Gun FDVL41 Speed Driver. (note this is not a color match screw)*

For best results, we recommend the above fasteners, which work well and provide an attractive appearance. Unless you are toe screwing, you will not have to pre-drill when you use these screws. *See Framing and Fastening Tips, page 31.*

Trex recommends the use of two screws per joist.

MINIMUM FASTENER SIZE		
	SCREWS	
Profile	Length	No.
1" x 6"	2-1/2" (6.4 cm) or 2-3/4" (7 cm)	#8, #10
2" x 6"	3" (7.6 cm)	#8, #10

1" X 6" (2.5 cm X 15.2 cm), 2" x 6" (5.1 cm x 15.2 cm)

If any condition occurs which is attributable to the use of non-recommended fasteners, such condition shall not be covered under Trex's Limited Warranty.

** FastenMaster® TrapEase® II, FastenMaster® TrimTop™, and Cortex® are registered trademarks of OMG, Inc.*

*** Camo® and Marksman Pro® are registered trademarks of National Nail Corp.*

**** Quik Drive® and Dexxter™ are registered trademarks and Composi-Lok™ is a trademark of Simpson Strong-Tie Company, Inc.*

***** NailScrews® is a registered trademark of Universal Fastener Outsourcing, LLC.*

****** Scrudini™ is a trademark of Swan Secure Products, Inc.*

******* DeckFast® CapTor® xd and HeadCote® CapTor® xd are registered trademarks of Starborn Industries Inc.*

******** C-Deck Exterior Star Deck Composite Deck Screw is a product of Screw Products Inc.*

********* Phillips II Plus® is a registered trademark of Phillips Fasteners LLC.*

DECKING FASTENERS

FASTENING TIPS FOR TREX ESCAPES®*

You can fasten Trex Escapes® with the above fasteners at least 1/2" (1.25 cm) and not more than 4" (10.2 cm) from the board edge without splitting. **You do not have to pre-drill with Trex Escapes.**

**Use Trex Universal Hideaway® hidden fasteners for Escapes grooved product. This includes additional screws for installation.*

FASTENING TIP FOR TREX ESCAPES®, TREX TRANSCEND®, TREX ENHANCE®, AND TREX® SELECT™

NOTE: *When using pneumatic or battery-operated equipment, adjust the pressure so that you only shoot the head of the nail to be flush with the board's cap.* ***DO NOT*** *shoot the fastener head completely through the cap.*

TREX AND STATIC ELECTRICITY

The buildup of static electricity on a flat surface can affect walking surfaces. This phenomenon can occur in dry climates, where hot dry winds and dust-born particles can create static electricity on the surface of the decking. (This static electricity is the same as when people drag their feet on a dry day or rub a balloon on fur or wool.) In most cases, hosing down the decking surface will dissipate the static charge, however if this continues the deck can be grounded. Consult with an electrician to determine the best methods for this.

TREX PRODUCTS NEAR LOW-E WINDOWS

Low-E glass reflects more sunlight, and it has been observed that the extra reflectivity combined with any concavity in the glass can act like that of a concave mirror, concentrating sunlight onto outdoor objects, including that of decking and railing. This can result in an extreme amount of heat concentrated on areas of the decking surface, which in turn can sometimes char the decking surface or cause the decking to slightly bow.

FRAMING AND FASTENING TIPS

Composite decking is a great alternative to traditional wood decking. When building your deck and railing, it is recommended that code-approved structural material be used as the framing and joists. One option is using Trex Elevations® steel deck framing. *Refer to www.trex.com for more information on Trex Elevations* . Check your local building codes for restrictions. Trex® decking cannot be used for structural applications. **DO NOT** attach Trex decking directly to any solid surface or watertight system. *See Sleeper Systems on page 32.* In most cases, install fasteners at a 90° angle (perpendicular to the board).

At board ends on the deck's edge, you can install screws placed perpendicularly at the recommended distance, at minimum of 1″ (2.5 cm) from the board end and edge, without splitting the board.

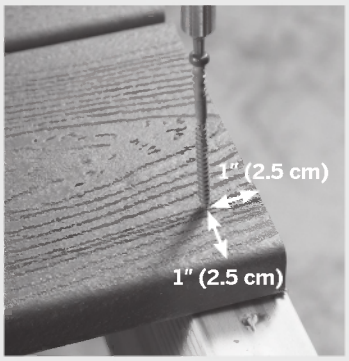

For butt joints, where boards meet over a single joist, add a 2″ x 4″ (5.1 cm x 10.2 cm) "nailer" board at the butt joint. This allows you to install a screw at a 90° angle.

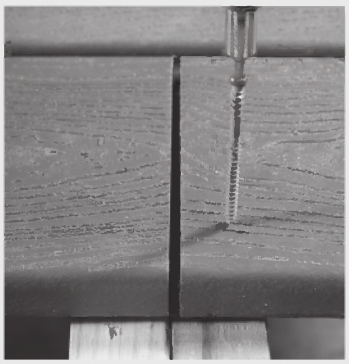

FASCIA FASTENING TIPS

- Trex fascia around the base of a deck must be gapped the same as the decking to allow for air flow.
- Attach the fascia every 12″ (30.5 cm) with three Trex approved screws. Place the top screw 1″ (2.5 cm) from the top of the rim joist, the second screw at the rim joist's center, and the third screw 1″ (2.5 cm) from the bottom of the rim joist.
- A construction grade weather resistant adhesive is also recommended to be used as a **SECONDARY** fastener when attaching fascia.

HIDDEN FASTENER TIPS

Start Clips Needed

You will need 0.75 clips for every lineal foot of decking. For example, 40 feet of decking would require 30 start clips.

0.75 x ____ft of decking = # of start clips

NOTE: *When using hidden fasteners (both start and connector clips), one must be used on every joist.*

Calculating the Number of Connector Clips Needed

- # of joists x # of decking boards = # of connector clips needed.
- Ninety (90) connector clips will cover approximately 50 sq. ft. (103 cm^2) using 5.5″ (14 cm) decking boards on 16″ (40.6 cm) centers.

CONNECTOR CLIPS NEEDED

Joist Spacing (on center)	Deck Size Square Feet				
	100	200	300	400	500
12″ (30.5 cm)	210	441	672	882	1113
16″ (40.6 cm)	175	336	512	672	848
24″ (66 cm)	110	231	352	462	583

DOCK APPLICATIONS

Trex decking contains no materials that will harm marine life and is safe for the environment. As long as dock is in intermittent contact with water, i.e., splashing and not in continuous direct contact with water, the durability of the Trex decking should not be affected.

For docks, a 3/8″ (1 cm) width-to-width gap between boards is recommended to allow for increased drainage due to increased contact with water. In addition, stainless steel fasteners should be used. If there is sufficient contact with the dock and gasoline, grounding of the dock is also recommended.

ROOFTOP AND SLEEPER DECK SYSTEMS

Sleeper Deck Systems

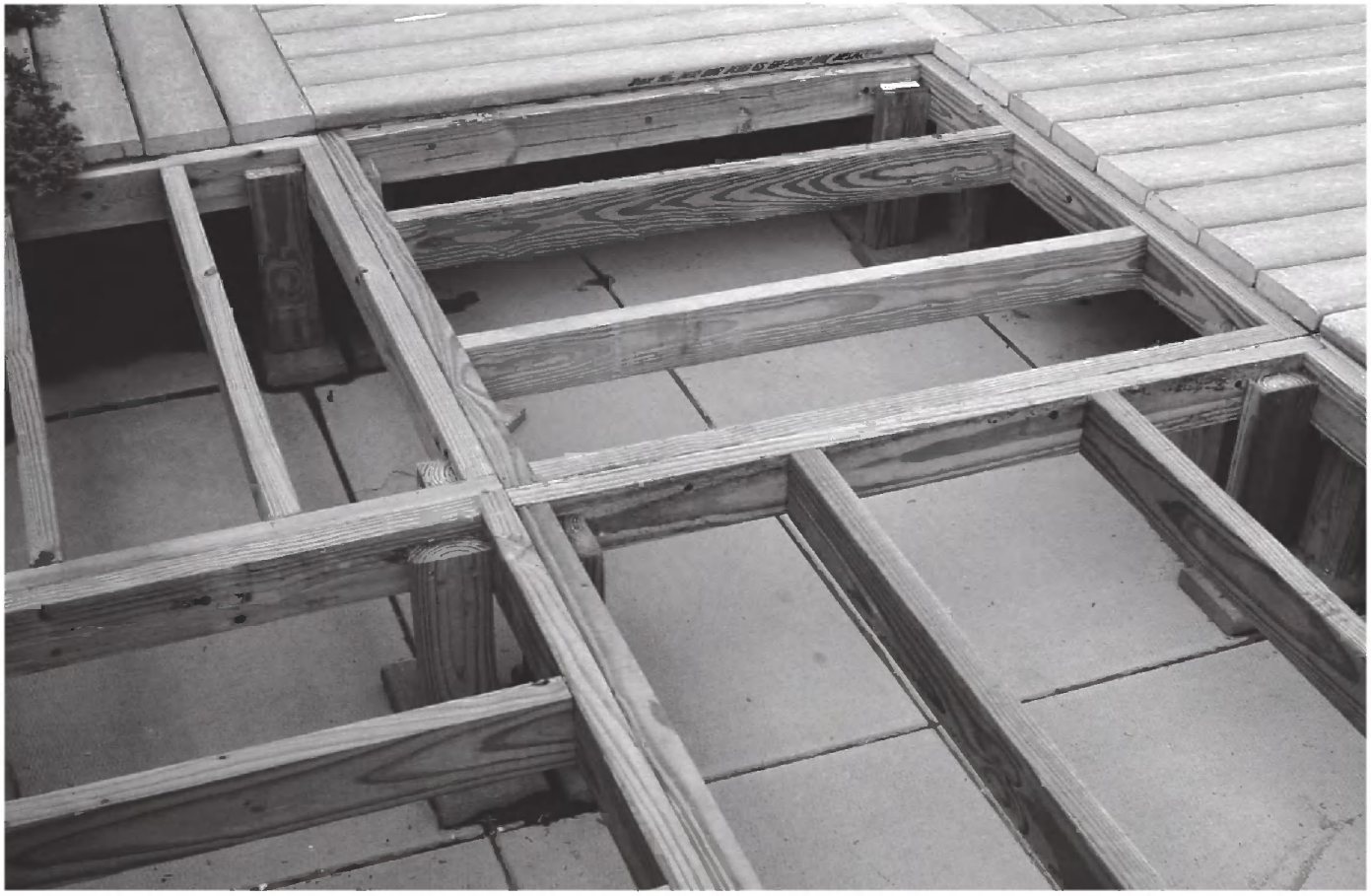

A sleeper system is a buffer between a solid surface and Trex® decking. Drainage, access, and airflow are critical. Water must be able to flow through and away from the deck. For repairs and removal of debris, joist system access is necessary. Good airflow will keep the decking dry and in good condition.

Trex, when used with a sleeper system, must be supported below its entire length and if used in a roofing application, the supports must run the direction of the pitch of the roof to facilitate proper drainage. In addition, sleeper joists must be attached to the roof structure in a manner that stabilizes the deck frame. Failure to do so may result in a poor structure which will compromise deck performance.

In areas of application where a sleeper system is required that would not be susceptible to excessive debris buildup (examples would include covered areas such as balconies, porches, etc.), a minimum height of 1-1/2" (3.8 cm) for pressure-treated joists as well as a minimum 1/4" (0.6 cm) gap between Trex decking would be acceptable. These areas would still have to be designed to allow for proper drainage and hidden fasteners would be acceptable. However, if access to the structure under the decking is required, it would be recommended to use either the Universal Fastener (plastic) or 2" (5.1 cm) composite decking screws. A 1/4" (0.6 cm) to 1/2" (1.3 cm) gap is still required when abutting walls or other fixed objects.

In all other areas where there could be excessive water buildup along with debris buildup, Trex would recommend a minimum height of 3-1/2" (8.9 cm) for pressure-treated joists, as well as a gap of 3/8" (1 cm). For this application, hidden fasteners would not be recommended and standard 3" (7.6 cm) composite screws would be used.

ALWAYS consult your local building code authority for proper details on roof and railing installation to the roof structure if required.

ROOFTOP DECK TIPS

» If you want to access the roof, you must build the Trex deck in removable sections or with removable fasteners.

» You must attach the sleeper joists to the roof structure so that they stabilize the deck frame. Failure to do so may result in a poor structure which will compromise deck performance.

CODE COMPLIANCE

Joist Spanning for Decking

Trex® decking meets all applicable national model building codes. The joists must be spaced on center according to the chart below. Be sure that joists are level and plumb. Trex decking must span at least three joists. For heavy items such as hot tubs, planters, etc., consult a local building engineer or inspector for span recommendations. If you want to minimize the appearance of joists through the spaces between boards, paint the top of your joists black.

Code Listings

Trex complies with major model building codes and has been evaluated by the International Code Council evaluation service.

Trex Complies with these Model Building Codes:

» 1997 Uniform Building Code (UBC).
» 1999/2009 Standard Building Code (SBC).
» 2006/2009 International Residential Code (IRC).
» 2006/2009 International Building Code (IBC).
» International One and Two Family Dwelling Code 1998.
» BOCA® National Building Code/1999 (BNBC).
» Trex decking is included in the National Research Council of Canada's Registry of Product Evaluations. See *trex.com* for CCMC Evaluation Report 13125-R.

For an Materials Safety Data Sheet (MSDS), please visit *trex.com*

ADJUST JOIST SPANNING TO ACCOMMODATE ANGLED DECKING PATTERNS*

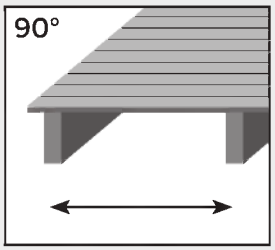

Perpendicular to joists. *See chart below.*

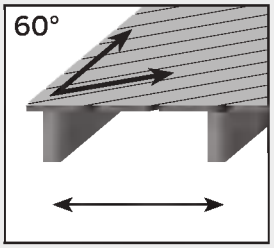

At a 60° angle, maximum joist spanning is 2" (5.1 cm) less than listed in the chart below.

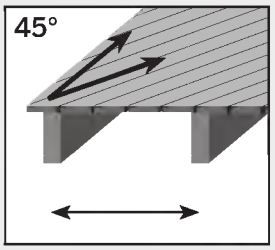

At a 45° angle, maximum joist spanning is 4" (10.2 cm) less than listed in the chart below.

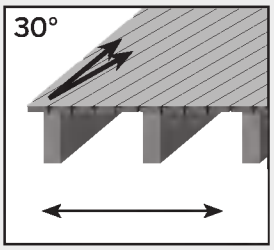

At a 30° angle, maximum joist spanning is 1/2 of the distance listed in the chart below.

Trex Transcend® and Trex Escapes®

Trex Transcend® and Trex Escapes® are compliant with the Wildland-Urban Interface, California State and San Diego County fire codes. For more information, e-mail *question@trex.com* or call 1-800-BUY-TREX (1-800-289-8739).

TREX DECKING SPAN CHART (On Center)

	Residential Decks, Light Duty Docks, Residential/Day care Playground	Commercial Decks, Boardwalks and Marinas	
Decking Loading	100psf (4826 Pa)	100psf (4826 Pa)	200psf (9576 Pa)
1" (2.5 cm) Boards (including Porch), and .875" (2.2cm) Select Boards	16" (40.6 cm)	16" (40.6 cm)	12" (30.5 cm)
2" x 6" (5.1 cm x 15.2 cm) Boards	24" (70 cm)	24" (70 cm)	16" (40.6 cm)

TREX RAILING SPAN CHART

	Maximum Railing Span for all Applications (on center of posts)
Transcend and Select Railing	96" (244 cm) on center
Designer Railing/ Traditional Railing	72" (183 cm) on center

GAPPING

You must gap Trex® decking, both end-to-end and width-to-width. Gapping is necessary for drainage and the slight thermal expansion and contraction of Trex decking boards. Gapping also allows for the shrinkage of the wood joist system.

» **ALWAYS** follow Trex-recommended gapping guidelines.

» Maximum allowable perpendicular overhang for Trex is 4" (10.2 cm) for non-walking surfaces only.

» All decks require air circulation to keep them dry and looking good. To improve air flow, leave openings under the decking or increase gapping to 3/8" (1 cm).

WIDTH-TO-WIDTH GAP	
Above 40°F* (4.5°C)*	1/4" (0.6 cm)
Below 40°F* (4.5°C)*	3/8" (1 cm)

**Temperature at installation.*

END-TO-END/END-TO-WIDTH AND ABUTTING GAP		
	End-to-End/ End-to-Width	**Abutting Gap**
Above 40° F* (4.5 C)*	1/8" (0.3 cm)	1/4" (0.6 cm)
Below 40° F* (4.5 C)*	3/16" (0.5 cm)	1/2" (1.3 cm)

**Temperature at installation.*

When you use the recommended hidden fasteners, the placement of the hidden fastener establishes the designated gap size.

When installing fascia, gapping rules must apply.

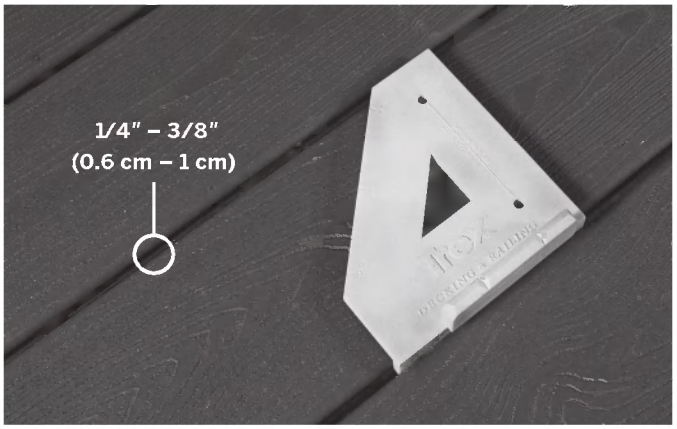

Width-to-Width
The minimum required width-to-width gapping is 1/4" (0.6 cm). When installing in temperatures below 40°F (4.5°C), Trex recommends 3/8" (1 cm) gapping. For docks and heavily wooded areas, Trex recommends a 3/8" (1 cm) gap as well. No gapping should ever exceed 1/2" (1.3 cm).

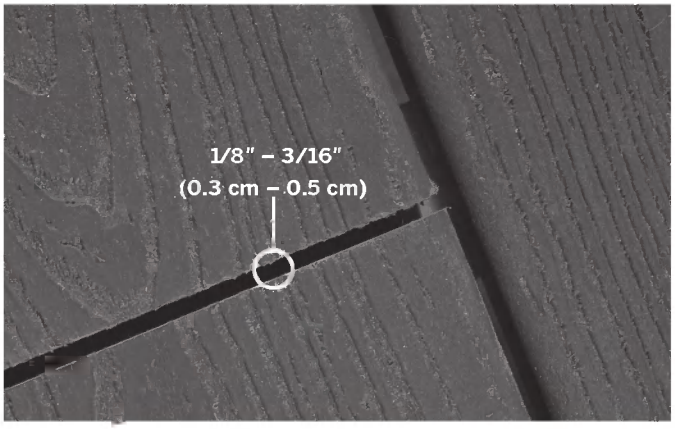

End-to-End/End-to-Width
Gap Trex decking end-to-end, based upon the temperature at installation. *See chart at left.* *For fastening tips, see page 31.*

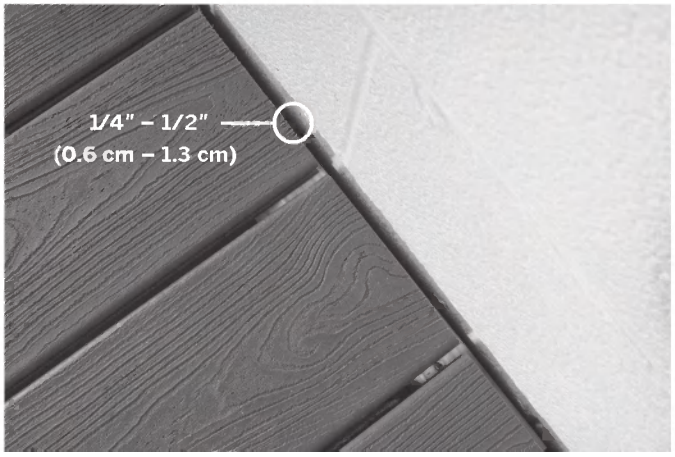

Abutting Solid Objects
When decking is abutting a wall, you must also gap it 1/4" - 1/2" (0.6 - 1.3 cm) depending on the temperature at installation. *See chart at left.*

STAIRS

Stairway Detail

» Stair treads built with Trex® meet requirements by the major national building codes. Consult your local municipality for specific requirements.

» Fasten stair treads continuously across at least four stringers.

» See chart (*at right*) for center-to-center spacing of profiles.

» Dress the sides of the stringers and risers with Trex fascia or trim for a finished look.

» Most model building codes require the stair treads to be constructed under the following requirements:

› Stairways must be at least 36″ (91.5 cm) wide*

› Stair treads must be at least 11″ (28 cm) deep

» Gapping between Trex boards on stair treads must be 1/4″ - 3/8″ (0.6 cm - 1 cm).

» The overhang of the stair tread is not to exceed 1/2″ (1.3 cm).

** For railings that are installed directly over stair treads, the stair treads may need to be larger than 36″ wide. Refer to local building code regulations for details prior to installing stairs and railings.*

NOTE: *Trex rails meet all major building codes for use as a guardrail system. Local municipalities may require a graspable handrail on stairways. Check with your local building code official for local requirements. See Trex ADA Handrail System on pages 102 - 105.*

MAXIMUM SPACING ON CENTER OF JOIST	
2″ x 6″ (5.1 x 15.2 cm), 1″ (2.5 cm) Boards	12″ (30.5 cm)
Escapes	9″ (24 cm)

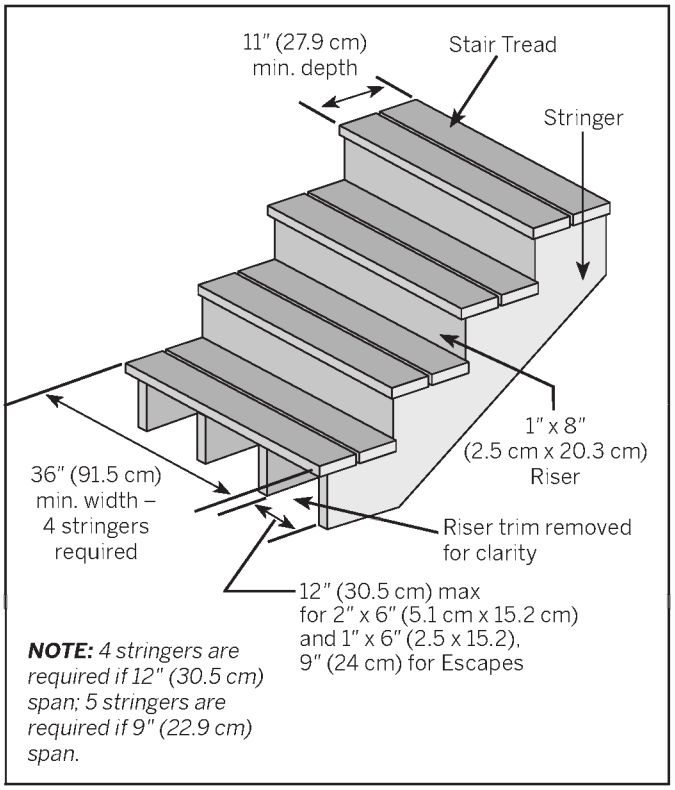

TIPS FOR INSTALLING A TREX HIDEAWAY® HIDDEN FASTENING SYSTEM

Installing Angled Deck Boards in Corners

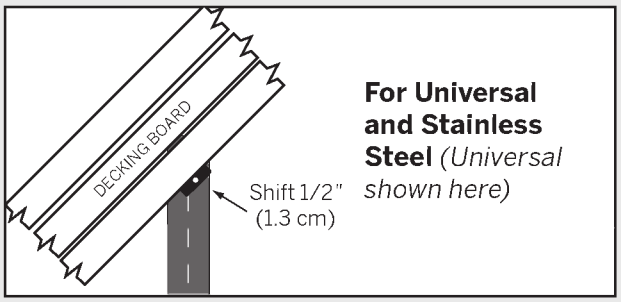

For Universal and Stainless Steel *(Universal shown here)*

ALWAYS start in corner with a small triangular piece of decking at 45° and work outwards. Install Trex Hideaway fasteners 1/2" (1.3 cm) off center to keep fastener screws in middle of joists.

How to Butt Seams

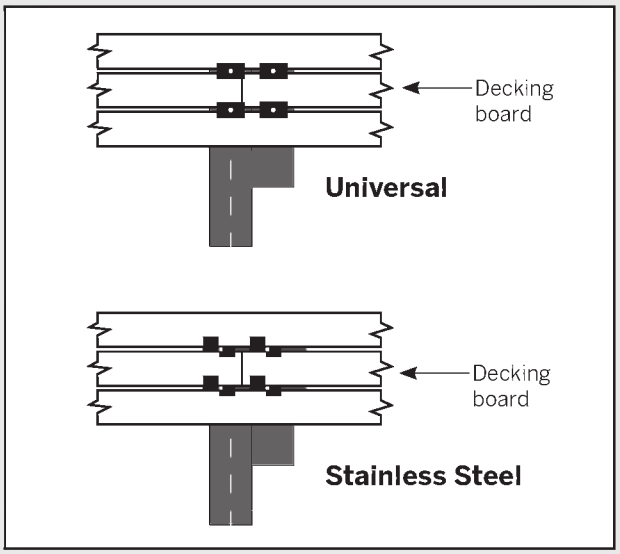

1. Install 10" - 12" (25.4 cm - 30.5 cm) framing boards along joists where seams will butt.
2. Place additional fasteners on the adjacent board over the joist and framing boards where the seam will be.
3. Put the first board of the seam in place and secure with fastener.
4. Butt end of second board to first and secure with fastener.

NOTE: *Follow end-to-end gapping specifications on page 34.*

5. Place second set of fasteners on each side of butt seam for next board.

Routing Square Edge Boards for Trex Hideaway Fasteners

NOTE: *The following Trex Square Edge decking boards (Trex Transcend®, Trex Enhance®, Trex Escapes®, Trex Accents®, and Trex Select®), either 1x6 or 2x6, can be routed.*

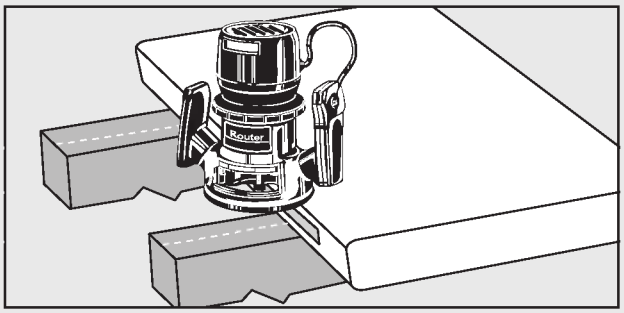

Using a Trex router bit/groove cutter available at your local Trex dealer:

1. Rout from bottom side of board.
2. Rout the entire length of the board, or at every intersection where the board is over support joists.

NOTE: Hidden Fasteners MUST be used at every joist.

HOW TO INSTALL TREX HIDEAWAY® STAINLESS STEEL FASTENERS
(TREX TRANSCEND®, ENHANCE®, ACCENTS®, AND SELECT®)

NOTE: *Cannot be used for Trex Escapes®.*

PARTS

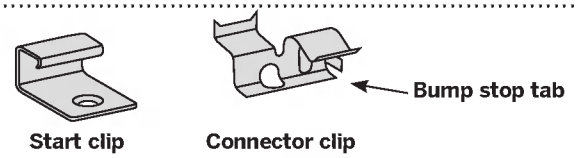

TOOLS NEEDED

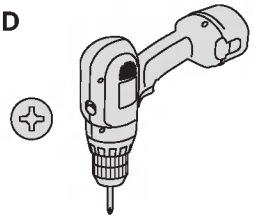

NOTE: *Maximum spacing of deck boards using the Hideaway system is 16" (40.6 cm) on center. Fasteners provide 1/4" (0.6 cm) gap when installed correctly.*

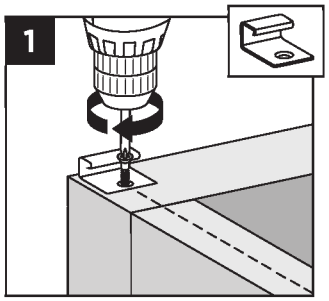

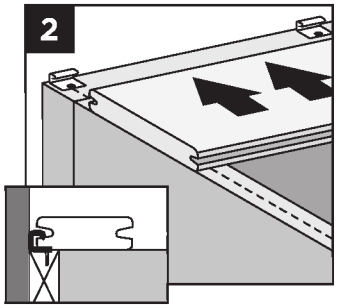

Installing Start Clips and First Board

1. Install start clips on edge of ledger board, centered on each joist. Secure clips with screws.
2. Push grooved edge of deck board into start clips. **Important:** First deck board **MUST** be straight and well secured.

Installing Stainless Steel Connector Clips

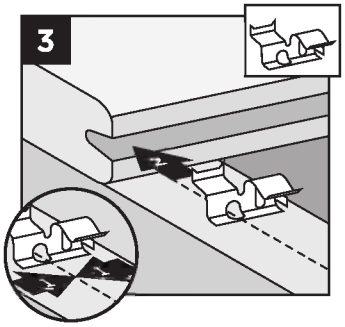

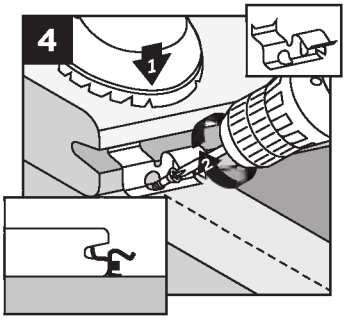

3. Insert connector clip into grooved edge of deck board at approximate 45 degree angle by seating the teeth in the top of the groove.
4. Center connector clip on joist and secure with screw (provided) at 45° angle while standing on board and applying pressure to clip. Install one connector clip on each joist. **Connector clips MUST be vertical to deck boards with screws securing clips in board's grooved edge.**

Installing Second Board

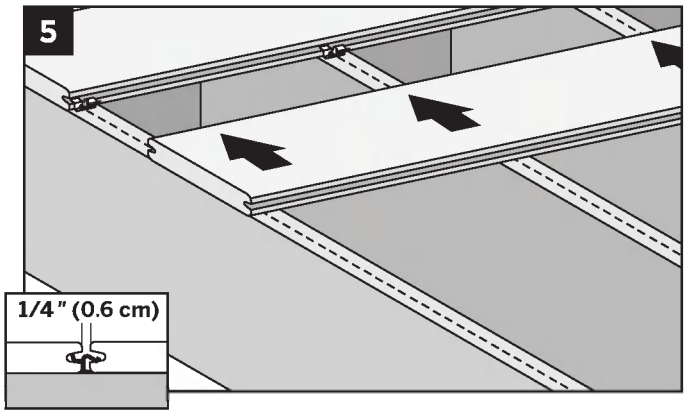

5. With next deck board in position and 2" (5.1 cm) from connector clips, push the boards with enough force to fully seat the clips in its grooved edge. Check gaps between boards. Fully engaged, the connector clip's bump stop tab provides a consistent 1/4" (0.6 cm) gap.

Installing the Last Board

Option 1:
Using a Fascia Board

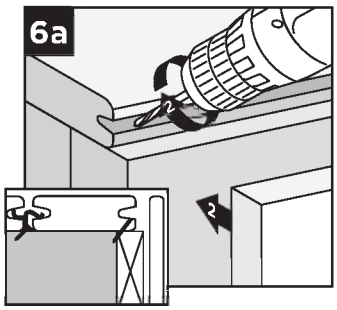

6a. Pre-drill pilot holes at an angle through grooved edge of deck board into ledger board. Install 2-1/2" (6.4 cm) decking screw using pilot holes to secure. Attach a fascia board flush with deck surface.

Option 2:
With Deck Board Overhang

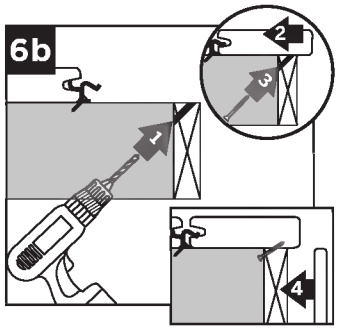

6b. Pre-drill pilot holes at 45° angle from below deck surface through rim joist. Seat last board into fasteners overhanging rim joist. Secure last board with 2-1/2" (6.4 cm) decking screws using pilot holes. Position fascia board below overhanging deck board.

HOW TO INSTALL TREX HIDEAWAY® UNIVERSAL HIDDEN FASTENERS
(TREX TRANSCEND®, ENHANCE®, ESCAPES®, ACCENTS®, AND SELECT®)

NOTE: *See page 39 for additional instructions if installing Escapes.*

PARTS

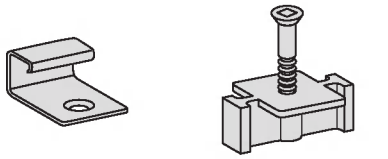

TOOLS NEEDED

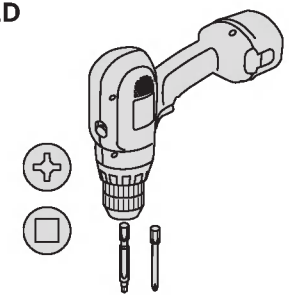

NOTE: *Maximum spacing of deck boards using Hideaway system is 16" (40.6 cm) on center. Fasteners provide 1/4" (0.6 cm) gap when installed correctly.*

Installing Start Clips and First Board

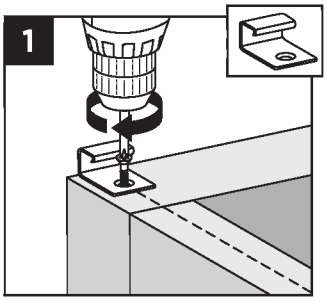

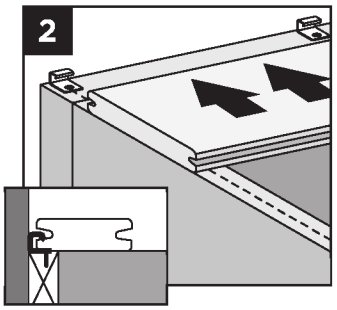

1. Install start clips on edge of ledger board, centered on each joist. Secure clips with screws.
2. Push grooved edge of deck board into start clips. **Important:** First board **MUST** be straight and well secured.

Installing Universal Fasteners

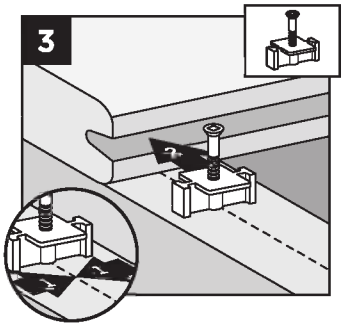

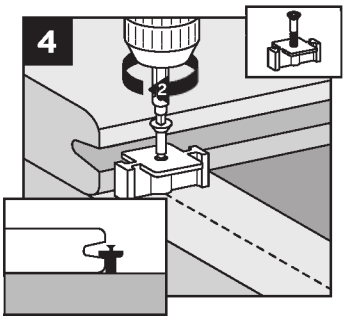

3. Insert fastener into grooved edge of deck board.
4. Align screw hole in fastener with center of joist. Continue along the length of the board at every joist.

NOTE: *Screw only half way down.* ***DO NOT*** *fully tighten.*

Installing Second Board

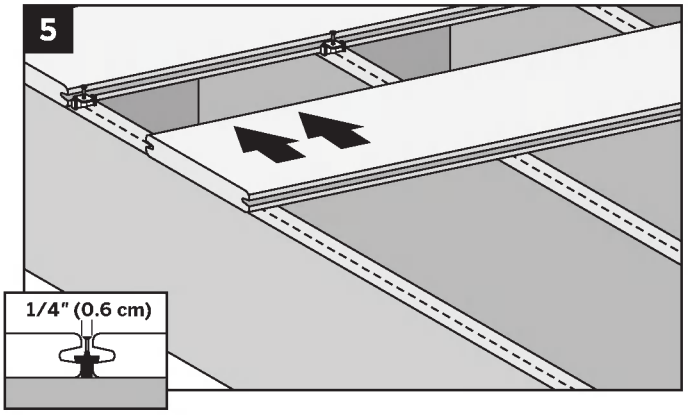

5. Slide second board into place, making sure fasteners fit into groove. Install the next universal fastener on the other side of the second board in the same manner as Steps 3 and 4. ***DO NOT*** *fully tighten the screw.*

Complete Installation

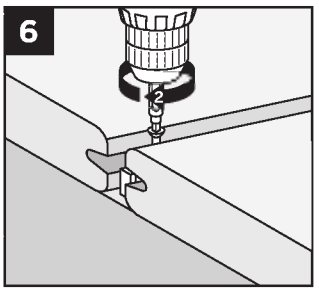

6. Tighten screws on fasteners in first row. Proceed with Steps 3 through 5, tightening down each row after board that follows is in place. Be sure to use a long #1 square bit.

Installing Last Board

Option 1:
Using Fascia Board

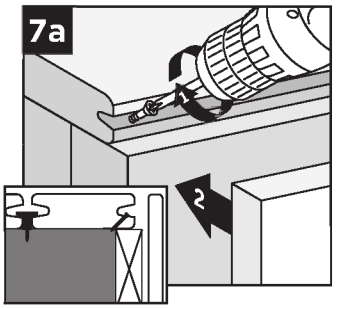

7a. Pre-drill pilot holes at an angle through grooved edge of deck board into ledger board. Install 2-1/2" (6.4 cm) screws through pilot holes to secure. Attach a fascia board flush with deck surface.

Option 2:
With Deck Board Overhang

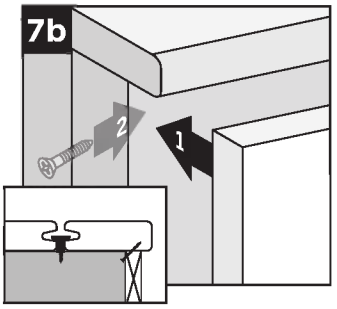

7b. Pre-drill pilot holes at 45° angle from below deck surface through rim joist. Seat last board into fasteners overhanging rim joist. Secure board with 2-1/2" (6.4 cm) screws using pilot holes. Position fascia board below overhanging deck board.

HOW TO INSTALL ESCAPES® BOARDS
WITH TREX HIDEAWAY® UNIVERSAL FASTENERS

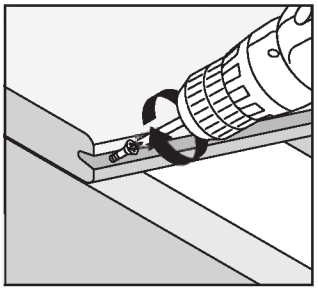

1. Follow steps 1 and 2 for installing start clips and first board. *See page 38.*
2. At both ends and center of first board, toenail screw (provided with Escapes universal hidden fasteners), at an angle through grooved edge of deck board.
3. Follow steps 3-5 for installing universal fasteners. *See page 38.*
4. For every consecutive board installed, toenail screw at an angle through grooved edge of deckboard as stated in Step 2.
5. Follow remaining steps for completing installation and installing last board. *See page 38.*

HOW TO REPLACE TREX® BOARDS
INSTALLED WITH STAINLESS STEEL (TREX TRANSCEND®, ENHANCE®, ACCENTS®, AND SELECT®)
Stainless Steel Fasteners

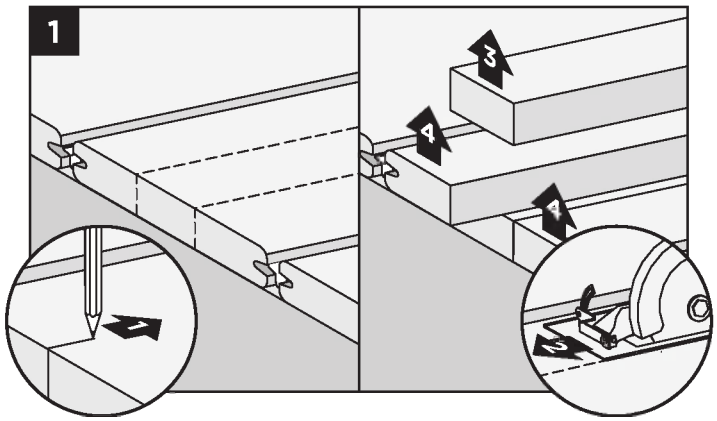

1. Mark the board to be replaced in thirds. Cut each side of middle section and remove it. Remove remaining two sections.

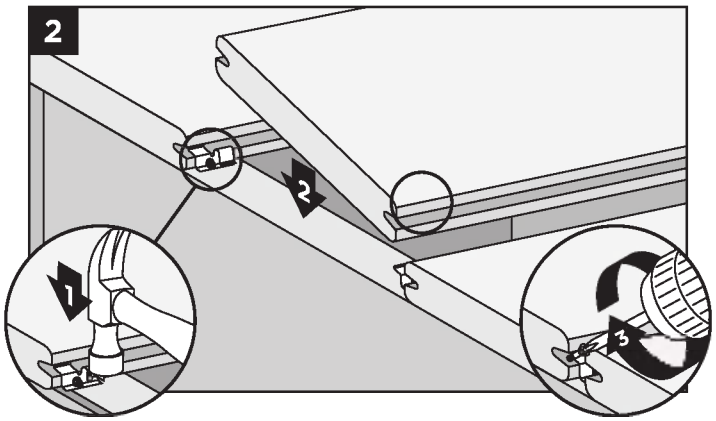

2. Hammer down the exposed side of the connector clips. Place the new board into position using a pry bar to maneuver it into place. Secure board on grooved edge with finish nails, screws or use counter drill, screws and plugs.

HOW TO REPLACE TREX® BOARDS
INSTALLED WITH TREX HIDEAWAY® UNIVERSAL FASTENERS (TREX TRANSCEND®, ENHANCE®, ESCAPES®, ACCENTS®, AND SELECT®)

Universal Fasteners

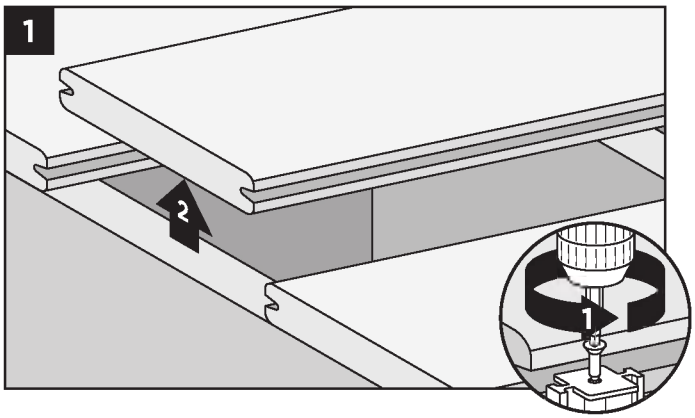

1. Remove screws from fasteners on both sides of board to be replaced and remove board.

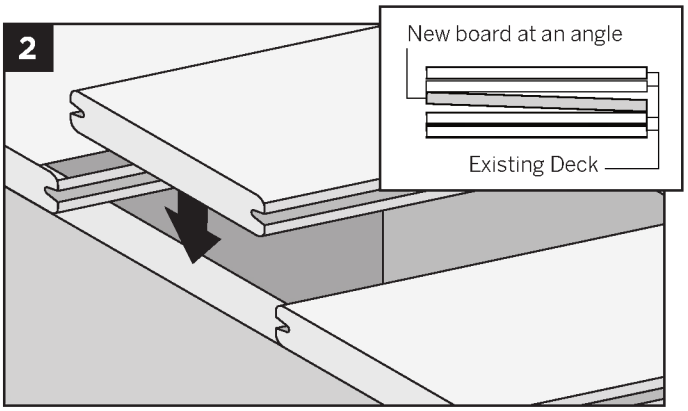

2. Angle new board to place. *See inset box (above).*

HOW TO REPLACE TREX® BOARDS/CONTINUED
INSTALLED WITH TREX HIDEAWAY® UNIVERSAL FASTENERS (TREX TRANSCEND®, ENHANCE®, ESCAPES®, ACCENTS®, AND SELECT®)

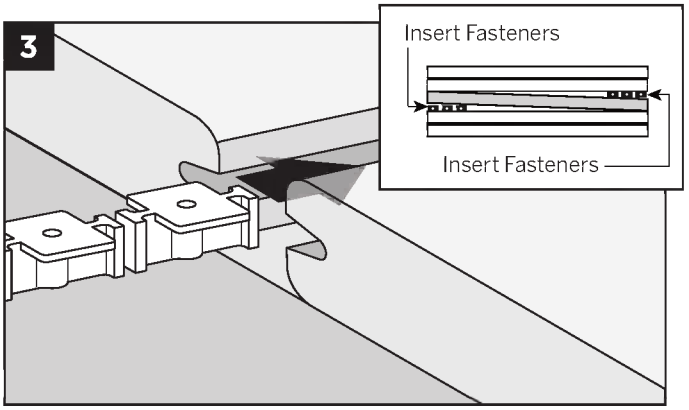

Universal Fasteners

3. Slide a fastener for each joist into board grooves from both ends of the board.

NOTE: *You may have to loosen adjacent boards to slide fasteners into position.*

4. Position replacement board and secure fasteners on center of each joist.

HOW TO INSTALL STAIR TREADS
(TREX TRANSCEND, ENHANCE, ESCAPES, ACCENTS, AND SELECT)

Installation Options
NOTE: *For best results use square edge decking and manually route sides that will be used to attach hidden fasteners.*

Option 1: Face Screw

1. Install start clips against riser on each step.
2. Install first board. *Follow steps on pages 37 - 38.*
3. Install second board. *Follow steps on pages 37 - 38.*
4. Secure with screws from top of second board into stringer boards.

Option 2: Using 2" x 4" (5.1 cm x 10.2 cm) Wood Support Blocks

1. Install start clips against riser on each stair tread.
2. Install first board. *Follow steps on pages 37 - 38.*
3. Attach 2" x 4" (5.1 cm x 10.2 cm) blocks between stringers.
4. Pre-drill holes up through blocks.
5. Install second board. *Follow steps on pages 37 - 38.*
6. Secure with screws from bottom through blocks and into stair treads.

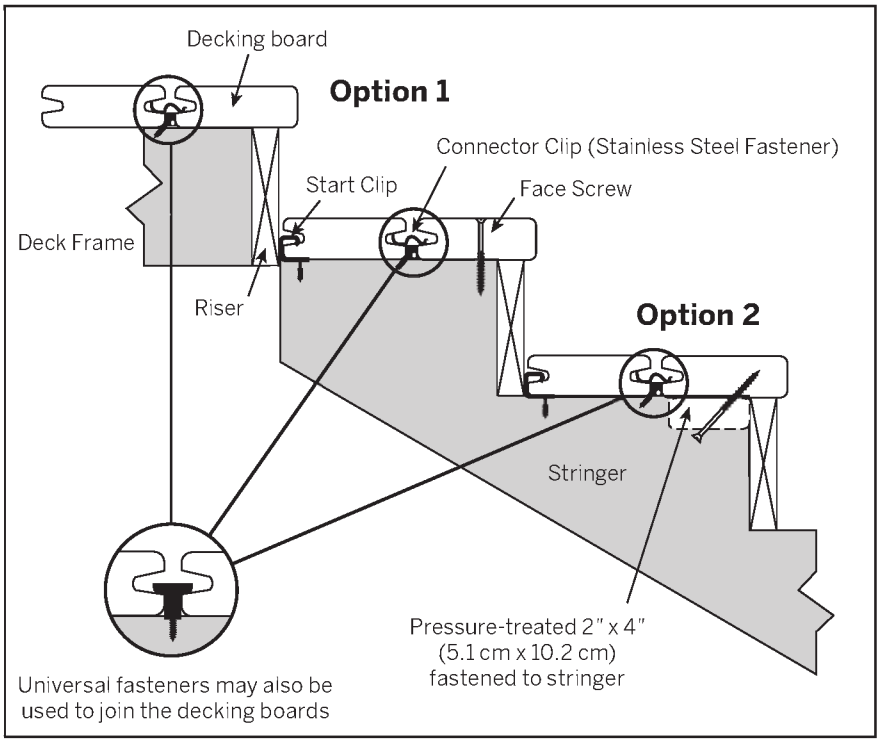

HOW TO INSTALL TREX TRANSCEND® PORCH FLOORBOARDS

NOTE: *When installing Trex Porch Floorboards in a non-covered environment, the porch structure should be slightly sloped to help allow for proper drainage. Joists should be sloped 1/8" (0.3 cm) per foot away from the house to facilitate drainage. Refer to your local building code official for recommendations BEFORE building sub-structure. When installing Trex Porch Floorboards under cover of a roof, no slope is required.*

PARTS

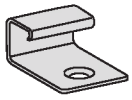

Start clip

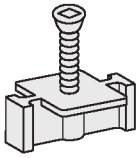

Universal fastener

TOOLS NEEDED

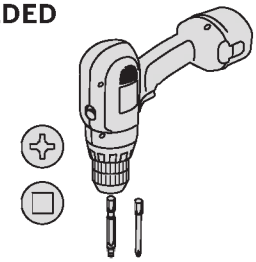

NOTE: *Refer to page 33 for proper joist spanning requirements.*

Installing Start Clips and First Porch Floorboard

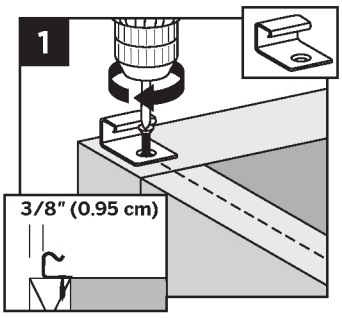

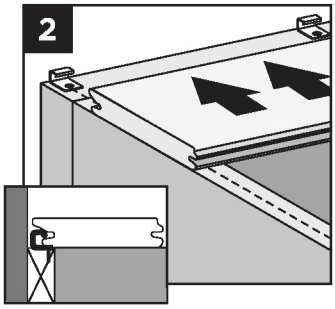

1. Measure 3/8" (1 cm) off of edge of ledger board, and install start clip onto ledger board, centered on each joist. Secure clips with screws.
2. Push grooved edge (longer edge side) of porch floorboard into start clips. **Important:** First board **MUST** be straight and well secured.

Installing Trex Hideaway® Universal Fasteners

3. Insert fastener into grooved edge (shorter edge side) of porch floorboard, making sure to align screw hole in fastener with center of each joist.

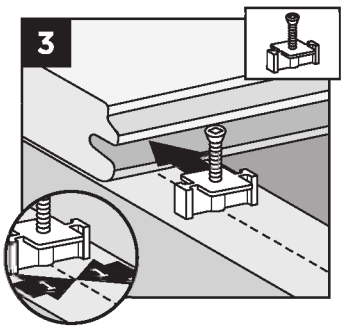

4. **IT IS SUGGESTED THAT IN ORDER TO KEEP THE FASTENER STRAIGHT AND SECURE, CUT AN 18" (45.7 cm) PIECE OF PORCH FLOORBOARD SCRAP BOARD AND USE THIS AS AN AID (USE SMALLER LIP SIDE) TO HELP HOLD THE HIDDEN FASTENER DOWN BEFORE SCREWING THIS IN.** This will help make sure the fastener stays fully straight for remaining boards to be attached.

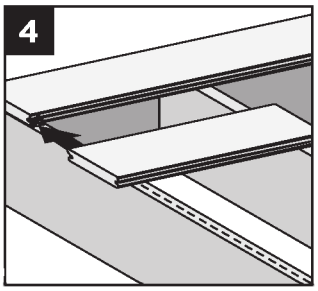

5. Fully tighten (but **DO NOT** over tighten) the screw into each joist while keeping the scrap board in firm place against the hidden fastener.

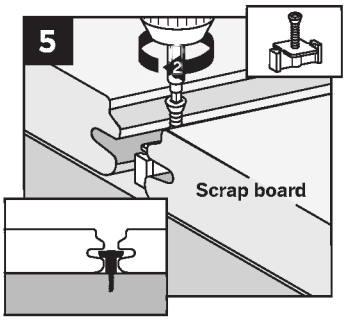

Installing Second Porch Floorboard

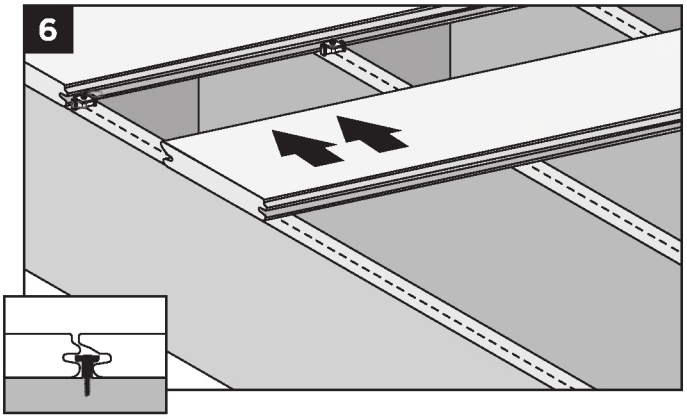

6. Slide second porch floorboard into place, making sure fasteners fit into groove. Install the next universal fastener on the other side of the second porch floorboard in the same manner as Steps 3 - 5.

HOW TO INSTALL TREX TRANSCEND® PORCH FLOORBOARDS/CONTINUED

Installing Last Porch Floorboard

Option 1:
Using Fascia Board

7a. Pre-drill pilot holes at an angle through grooved edge of porch floorboard into ledger board. Install 2-1/2" (6.4 cm) screws through pilot holes to secure. Attach fascia board flush with porch floorboard surface.

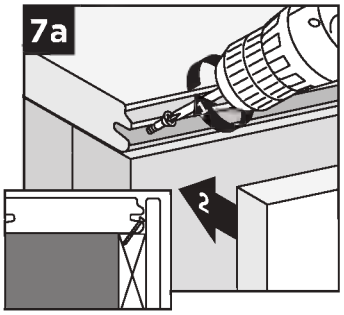

NOTE: *In most cases there will be additional screws that come with the Trex Hideaway® Universal Hidden Fasteners. These screws can also be used for attachment of the last board in the method shown above.*

Option 2:
With Porch Floorboard Overhang

NOTE: *This side of porch floorboard will have to be cut flush to not show grooves. Note that color of porch floorboard will be slightly different at cut edge.*

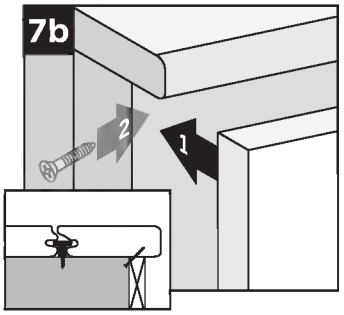

7b. Pre-drill pilot holes at 45° angle from below deck surface through rim joist. Seat last porch floorboard into fasteners overhanging rim joist. Secure porch floorboard with 2-1/2" (6.4 cm) screws using pilot holes. Position fascia board below overhanging porch floorboard.

HOW TO INSTALL PORCH STAIR TREADS

NOTE: Use square edge composite decking boards and manually route these on one side to allow for use with hidden fasteners.

Option 1: Using Hidden Fasteners and Face Screwing

1. Install start clips against riser on each step.
2. Install first board. *Follow steps on pages 37 - 38.*
3. Install second board. *Follow steps on pages 37 - 38.*
4. Secure with screws from top of second board into stringer boards.

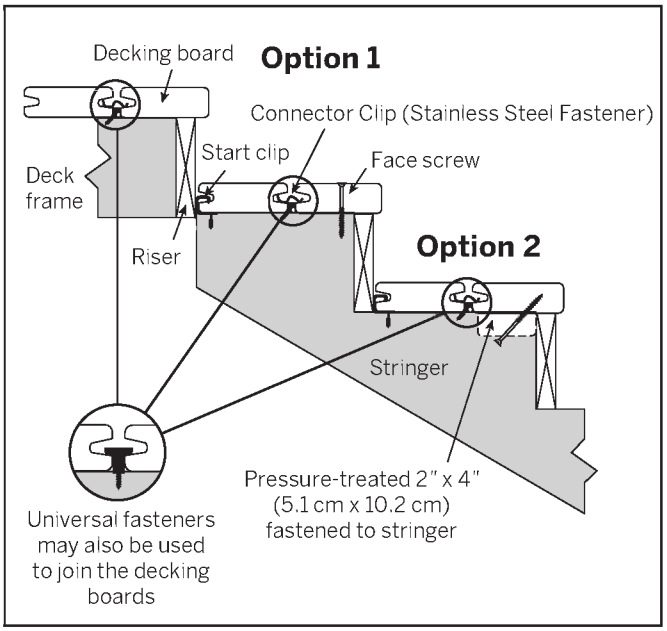

Option 2: Using Hidden Fasteners and 2" x 4" (5.1 cm x 10.2 cm) Wood Support Blocks

1. Install start clips against riser on each stair tread. *Follow steps on pages 37 - 38.*
2. Install first board. *Follow steps on pages 37 - 38.*
3. Attach 2" x 4" (5.1 cm x 10.2 cm) blocks between stringers.
4. Pre-drill holes up through blocks.
5. Install second board. *Follow steps on pages 37 - 38.*
6. Secure with screws from bottom through blocks and into stair treads.

HOW TO INSTALL 4X4 AND 5X5 STRUCTURAL PORCH POSTS

PARTS

- » Aluminum support tube
- » Decorative column
- » Filler strips
- » Mounting plate(s)
- » Post skirts (*not provided*)
- » #10 x 1.000" screws

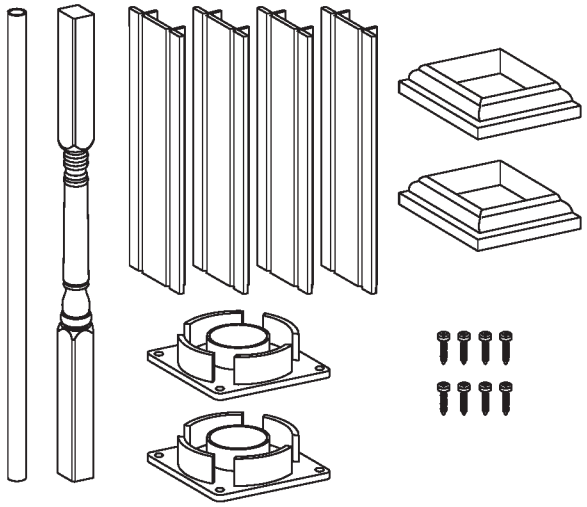

TOOLS NEEDED

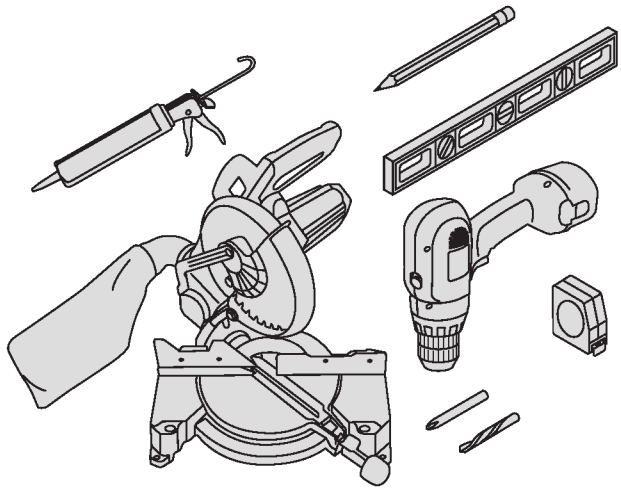

HELPFUL TIPS

- » **DO NOT** lay vinyl parts on abrasive surfaces.
- » 1/8" (0.3 cm) Tapcon anchors (*not provided*) are recommended for installation on concrete.
- » Use a carbide-tipped multi-purpose blade.
- » If any components are missing or defective, please call 1-800-BUY-TREX.

Measuring and Cutting Aluminum Support Tube

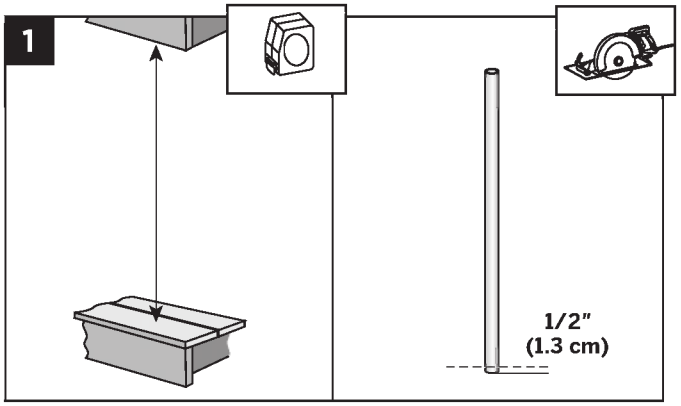

1. Measure opening height and cut aluminum support tube 1/2" (1.3 cm) shorter.

Attaching Support Tube to Mounting Plate

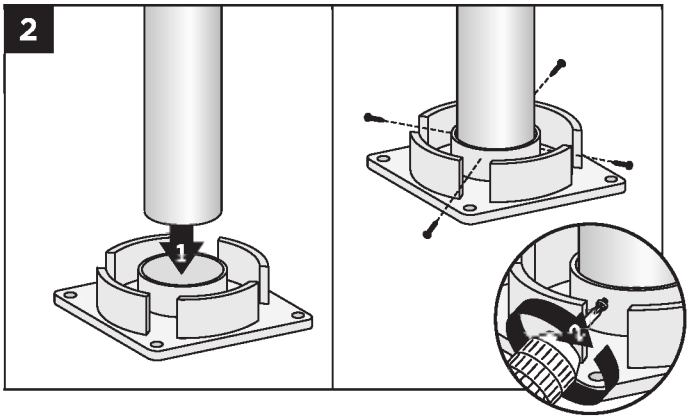

2. Insert support tube into center of mounting plate between outside tabs. Fasten with four #10 x 1.000" screws *(provided)*.

Measuring and Cutting Decorative Column

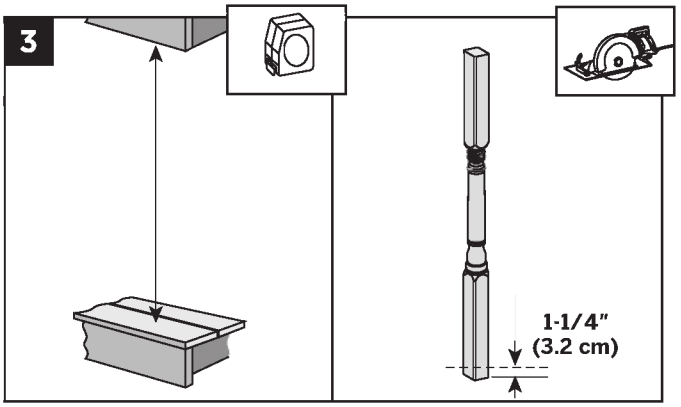

3. Cut molded decorative column 1-1/4" (3.2 cm) shorter than opening height.

Attaching Decorative Column to Mounting Plate

4. Slide the decorative column over the support tube leaving about 24" (61 cm) exposed.

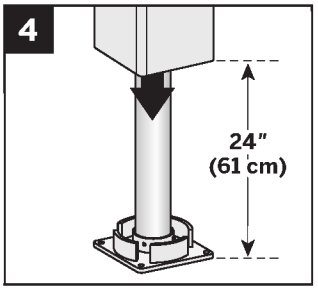

NOTE: DO NOT *slide decorative column on rough surfaces to avoid scratching.*

Installing Filler Strips

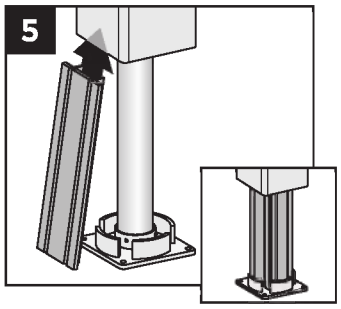

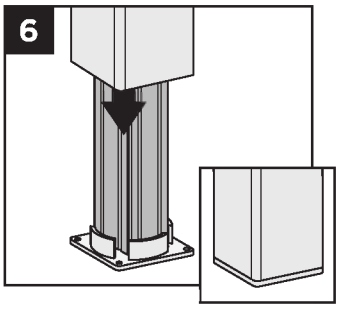

5. Slide a filler strip into each side of decorative column in-between aluminum support tube and inside wall of column. **Do this on all 4 sides.**
6. Slide decorative column down over filler strips and onto bottom mounting plate until column sits flush as shown.

Placing Second Mounting Plate

7. Place second supplied mounting plate on top of aluminum support tube (inside decorative column) and secure using four #10 x 1.000" screws *(provided)*.

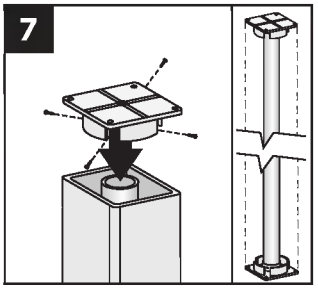

NOTE: *The sides of the two mounting plates must be parallel to each other as shown above.*

Installing Post Skirts

8. Cut out a notch on the inner wall of two post skirts (*not provided*) as shown. This will be required to allow clearance for screw heads installed in Step 11.

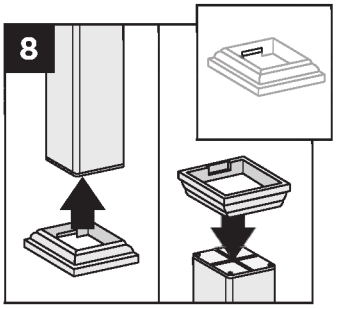

9. Slide two post skirts (*not provided*) onto top and bottom of decorative column and place entire assembly into opening in desired location.

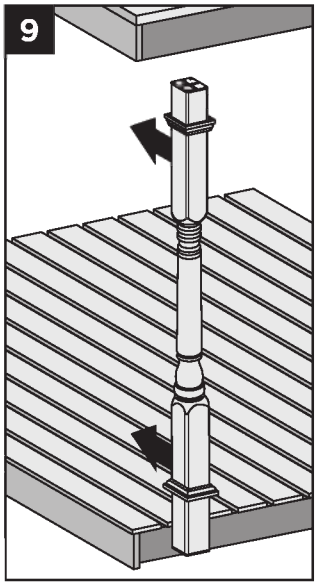

Attaching Decorative Column to Deck Flooring

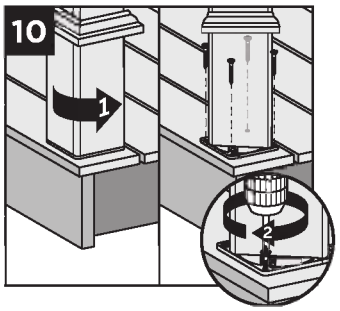

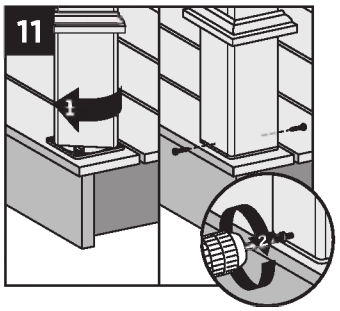

10. Rotate decorative column 45° to expose mounting holes in mounting plates both at top and bottom.
11. Fasten mounting plates to floor and ceiling using appropriate fasteners (*not provided*) for your application. Make sure the post is plumb and square.

Finishing Installation

12. Slide post skirts into position on top and bottom of post and secure using PVC glue.

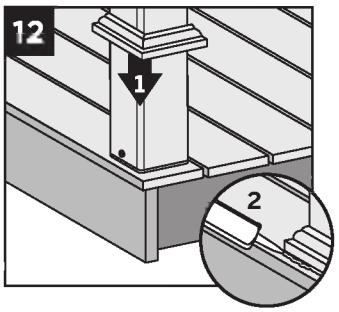

NOTES: *When attaching Trex Transcend® or Designer Series® railing to porch posts:*

» *Use #10 x 2 self-drilling screws to attach RSB's to flat side of porch posts.*

» *Use #10 x 3 self-drilling screws when using Trex Bird's Mouth to attach railings to corners.*

HOW TO INSTALL POST MOUNTS ON DECK BOARD

NOTE: *Cannot be used with Trex Transcend® Classic railing or Trex Traditional railing styles.*

NOTE: *If using Trex 48" Newel Post, a post mount system must be used.*

PARTS

- (1) Post mount
- (2) Guide blocks
- (4) 5/16" x 6" (0.8 cm x 15.2 cm) Hex (mounting) bolts
- (4) 5/16" x 1" (0.8 cm x 2.5 cm) Hex (leveling) bolts
- (1) Leveling plate
- (1) Back plate
- (8) Flat washers
- (4) Hex nuts
- (4) 3/4" (1.9 cm) Self-tapping screw
- (8) 1-1/2" (3.8 cm) Stainless steel screws
- (8) 2" (5.1 cm) Stainless steel screws

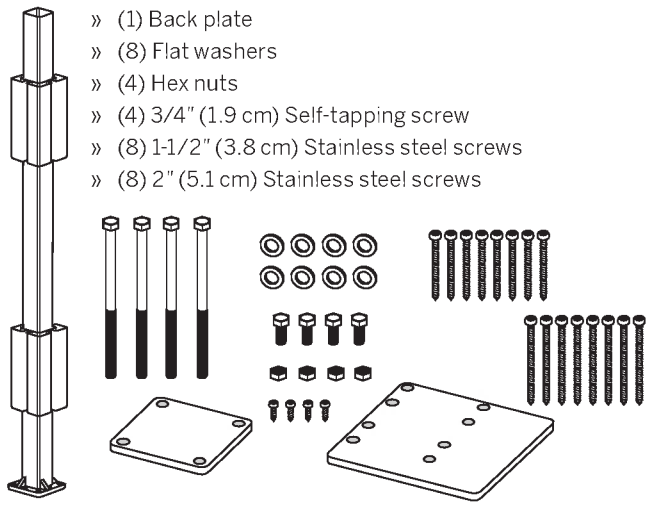

TOOLS NEEDED

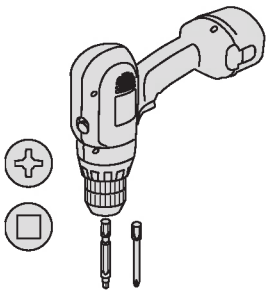

Install Blocking at Post Location

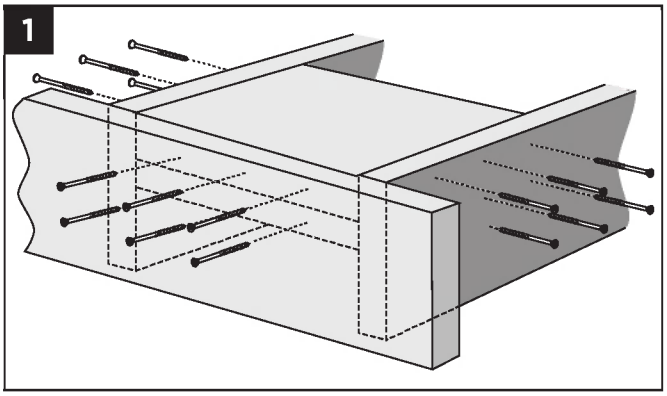

1. Install at least two 2" x 8" (5.1 cm x 20.3 cm) boards as blocking under post location. Securely attach blocking using wood screws, penetrating blocking a minimum of 1-1/2" (3.8 cm).

Position Leveling Plate

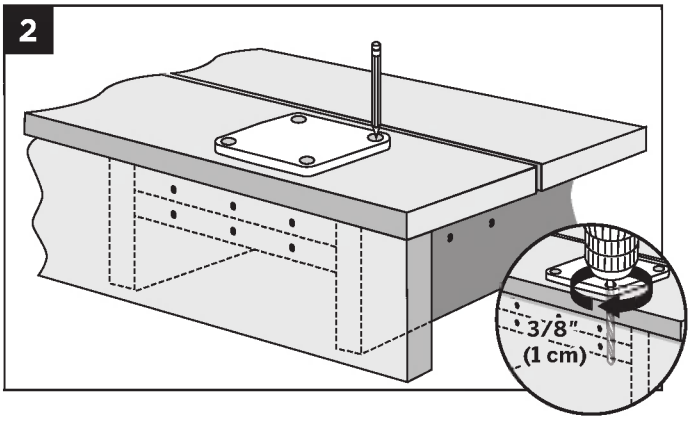

2. Using leveling plate as a template, mark locations of the four holes. Drill through decking and blocking using a 3/8" (1 cm) diameter drill bit.

Place and Level Post Mount

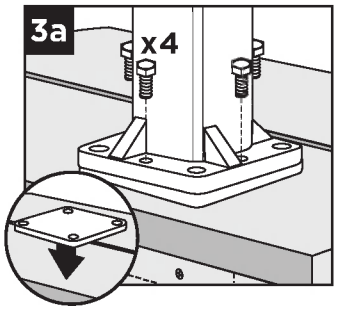

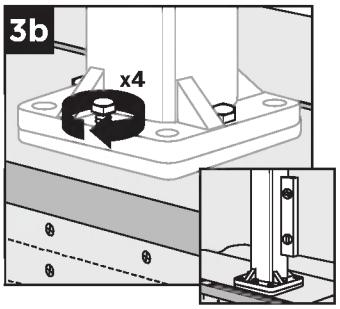

3a. Partially thread four 5/16" x 1" (0.8 cm x 2.5 cm) hex (leveling) bolts through center holes in post mount. Place leveling plate on decking surface with holes aligned.

3b. Place post mount on leveling plate and adjust 5/16" x 1" (0.8 cm x 2.5 cm) hex bolts to plumb.

Installing Mounting Bolts and Back Plate

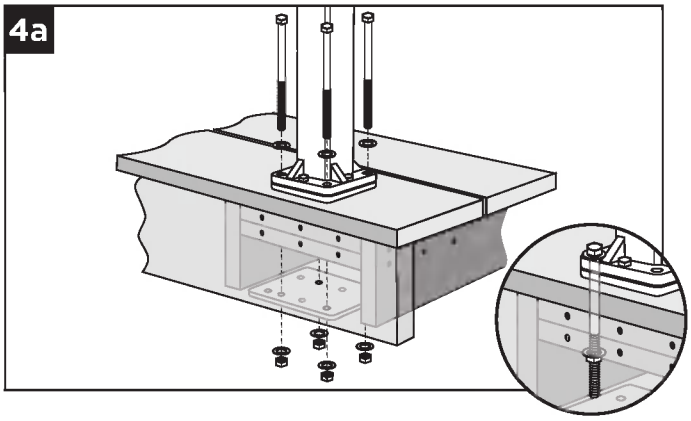

4a. Thread the 5/16" x 6" (0.8 cm x 15.2 cm) hex (mounting) bolts through the post mount, leveling plate, and blocking. Place back plate on underside with mounting bolts through appropriate holes and secure with washers and hex nuts.

HOW TO INSTALL POST MOUNTS ON DECK BOARDS/CONTINUED

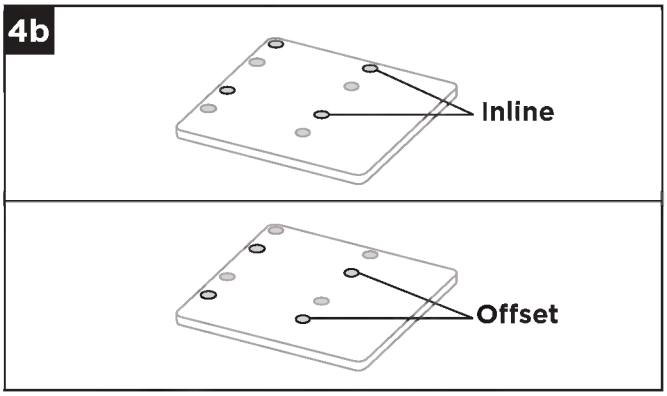

4b. Use center holes for inline applications and offset holes for corner applications.

Install Guide Blocks

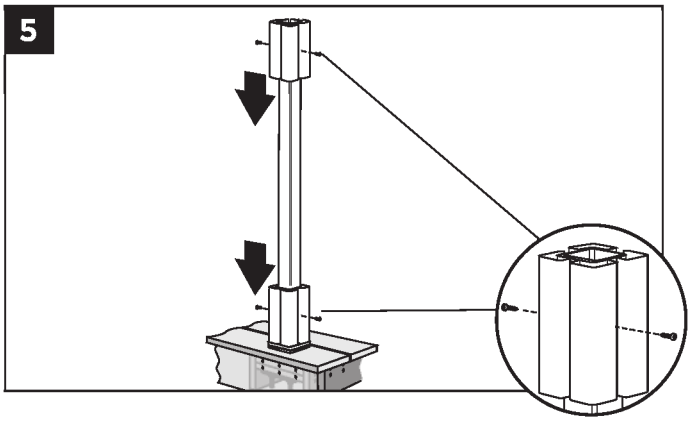

5. Place the two guide blocks onto post mount. Insert self-tapping screws *(provided)* to secure.

Install Railing System of Choice

NOTES: *If installing a Trex® railing system:*

- *Mark screw placement on post sleeve for the rail support brackets (RSBs).*
- *Pre-drill screw holes through post sleeve and aluminum guide blocks with a 1/8" (0.3 cm) drill bit.*
- *Attach RSBs using 1-1/2" (3.8 cm). screws (provided) for 4" x 4" (10.2 cm x 10.2 cm) Trex post sleeves.*
- *Attach RSBs using 2" (5.1 cm) screws (provided) for 6" x 6" (15.2 cm x 15.2 cm) Trex post sleeves.*

NOTE: *If installing Trex Decklighting™ on the posts, drill hole through bottom plate as well as any support blocks to allow wiring for lights to be below the surface of the decking.*

DECKING:
HOW TO INSTALL POST MOUNTS ON CONCRETE

NOTE: *Cannot be used with Trex Transcend® Classic railing or Trex Traditional railing styles.*

PARTS

- (1) Post mount
- (2) Guide blocks
- (4) 3/8" x 3" (0.8 cm x 15.2 cm) Concrete bolts
- (4) 5/16" x 1" (0.8 cm x 2.5 cm) Hex (leveling) bolts
- (1) Leveling plate
- (4) Flat washers
- (4) 3/4" (1.9 cm) Self-tapping screw
- (8) 1-1/2" (3.8 cm) Stainless steel screws
- (8) 2" (5.1 cm) Stainless steel screws

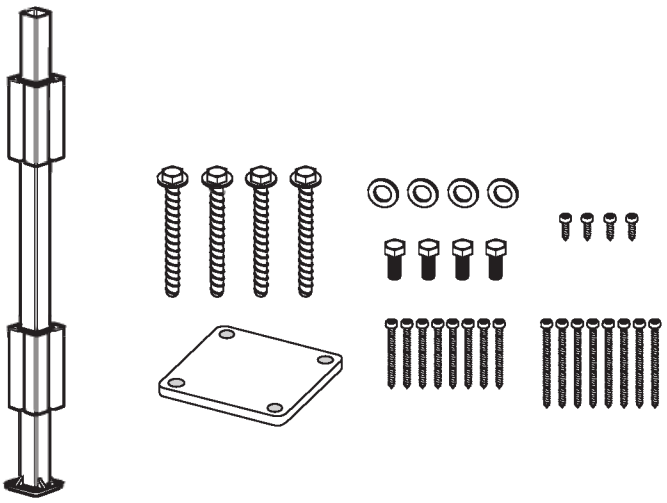

TOOLS NEEDED

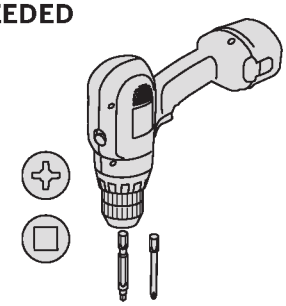

Position Leveling Plates

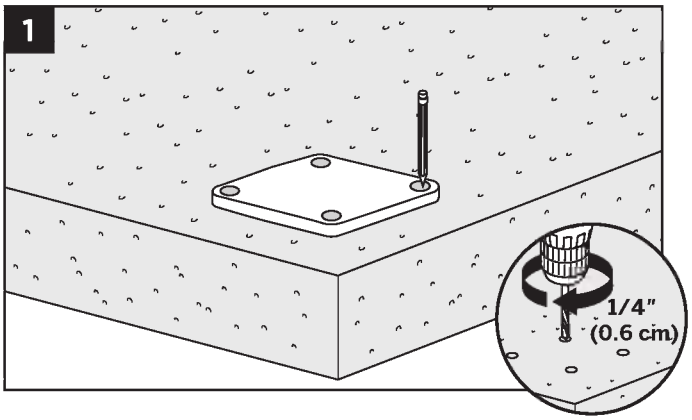

1. Using leveling plate as a template, mark locations of the four holes and drill into concrete at least 3-1/2" (8.9 cm) using a 1/4" (0.6 cm) masonry bit.

Install Leveling Bolts and Level Post Mount

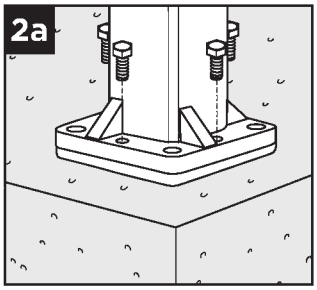

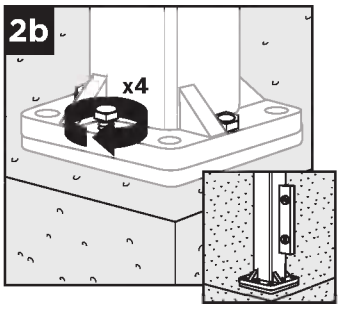

2a. Partially thread four 5/16" x 1" (0.8 cm x 2.5 cm) hex (leveling) bolts in post mount. Place leveling plate on concrete holes aligned.
2b. Place post mount on leveling plate and adjust 5/16" x 1" (0.8 cm x 2.5 cm) hex (leveling) bolts to plumb.

Install Mounting Bolts

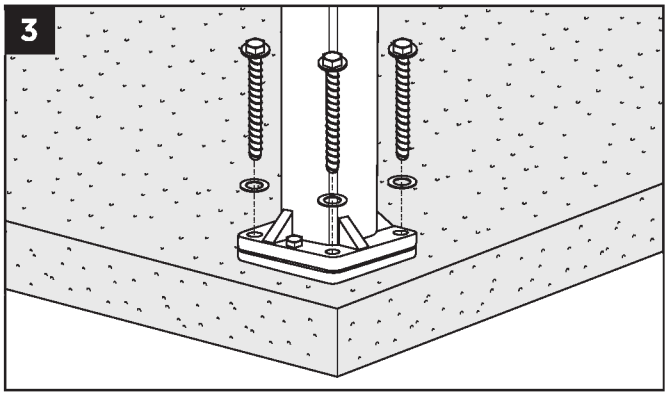

3. Secure post mount with four concrete bolts and washers.

NOTE: *Torque recommended is 5 - 10 ft. lbs.*

Install Guide Blocks

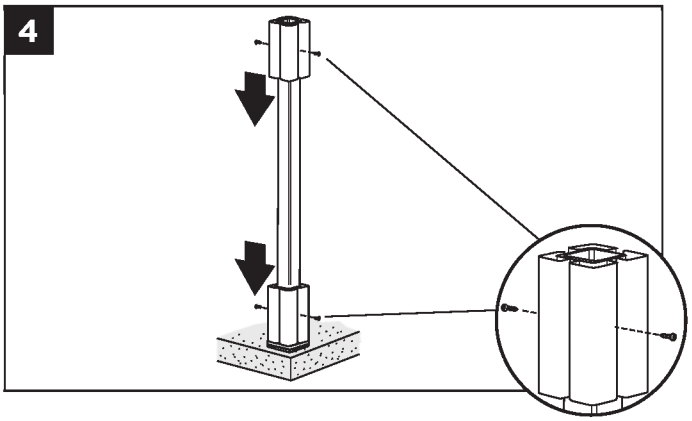

4. Place the two guide blocks on post mount and secure with self-tapping screws *(provided)*.

Install Railing System of Choice

NOTES: *If installing a Trex® railing system:*

» *Mark screw placement on post sleeve for the rail support brackets (RSBs).*

» *Pre-drill screw holes through post sleeve and aluminum guide blocks with a 1/8" (0.3 cm) drill bit.*

» *Attach RSBs using 1-1/2" (3.8 cm) . screws (provided) for 4" x 4" (10.2 cm x 10.2 cm) Trex post sleeves.*

» *Attach RSBs using 2" (5.1 cm) screws (provided) for 6" x 6" (15.2 cm x 15.2 cm) Trex post sleeves.*

HOW TO INSTALL POST MOUNT UPPER ALUMINUM GUIDE BLOCK WITH TREX NEWEL POST FOR RAILING ASSEMBLY

TOOLS NEEDED

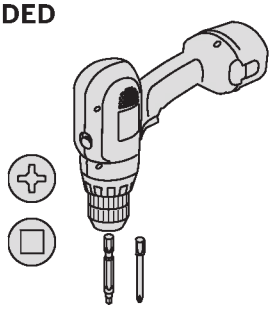

NOTE: *When using the post mount system with the Trex Newel Posts for railing, the method of attachment for the upper aluminum guide block cannot be attached as per the instructions.*

1. Install post mounts as per previous instructions. *See pages 45 - 47.*

2. Install lower guide block as per previous instructions. *See pages 46 - 47.*

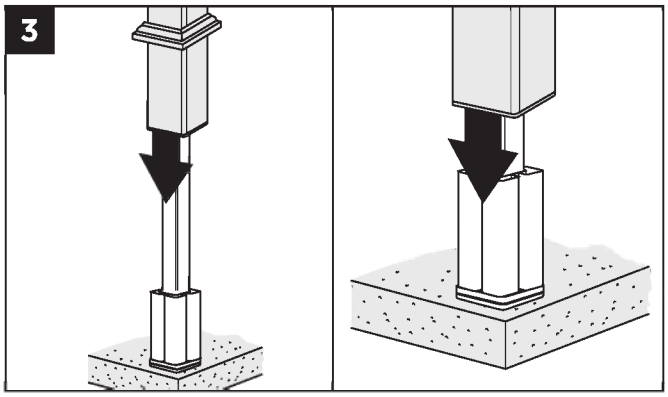

3. Slide Newel Post Sleeve over post mount.

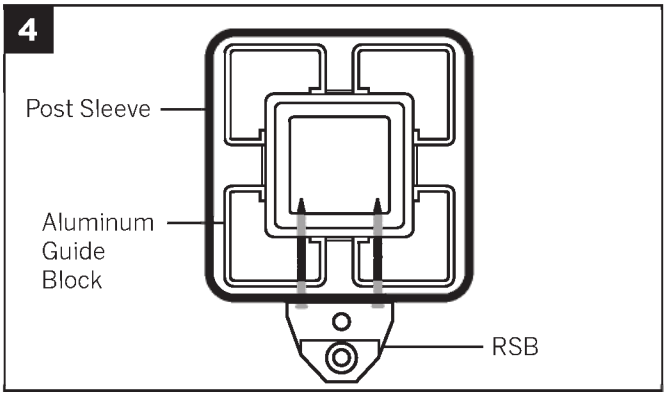

4. Slide upper glide block onto post mount within Newel Post Sleeve. In order to securely attach the guide block to the railing system you will need to use two #10x2″ self-tapping screws (not provided) for attachment of the RSB bracket. These screws, when attached, will penetrate though the aluminum guide block and into the steel post. Pre-drilling will be required (use a 5/32″ drill bit) in this area to ensure that you penetrate through the steel post.

NOTE: *In some cases the alignment of the screws from the bracket into the guide block can be difficult to line up. Since the screws in this case are penetrating into the steel post, exact alignment is not critical.*

RAILING

TREX TRANSCEND® RAILING SPECIFICATIONS AND PROFILES

PART	DESCRIPTION	ITEM NUMBER	COLORS
Post Sleeve/Porch Post/ Newel Post 	4" x 4" x 39" (10.2 cm x 10.2 cm x 99.1 cm) Post Sleeve 4" x 4" x 108" (10.2 cm x 10.2 cm x 2.74 m) Post Sleeve *(Each 4" x 4" (10.2 cm x 10.2 cm) post sleeve includes a corrugated TrexExpress™ Railing Assembly Tool.)* *(Actual dimensions of 4x4 Post Sleeve is 4.45" x 4.45")* 6" x 6" x 39" (15.2 cm x 15.2 cm x 99.1 cm) 6" x 6" x 108" (15.2 cm x 15.2 cm x 274.3 cm) *(Each 6" x 6" (15.2 cm x 15.2 cm) post sleeve fits over a 4" x 4" (10.2 cm x 10.2 cm) pressure-treated post.)* *(Actual dimensions of 6x6 Post Sleeve is 5.5" x 5.5")*	XX040439APS XX0404108APS WT060639APS WT0606108APS	WT, BK, TH, VL, GP, FP, RS WT WT
Post Mount 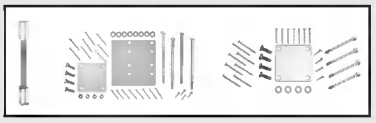	36" (91.4 cm) Post Surface Mount 42" (1.07 m) Post Surface Mount Post Surface Mount Hardware - Concrete (10 kits/box) Post Surface Mount Hardware - Wood (10 kits/box)	POSTMOUNT36 POSTMOUNT42 POSTHDWCONC POSTHDWWOOD	
Post Sleeve Skirt 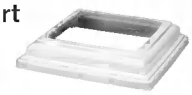	4" x 4" (10.2 cm x 10.2 cm) Post Sleeve Skirt 6" x 6" (15.2 cm x 15.2 cm) Post Sleeve Skirt	XXSKIRT4X4 WTSKIRT6X6	WT, BK, TH, VL, GP, FP, RS WT
Post Sleeve Cap 	Flat 4" x 4" (10.2 cm x 10.2 cm) Post Sleeve Cap Pyramid 4" x 4" (10.2 cm x 10.2 cm) Post Sleeve Cap Flat 6" x 6" (15.2 cm x 15.2 cm) Post Sleeve Cap Pyramid 6" x 6" (15.2 cm x 15.2 cm) Post Sleeve Cap	XXSQCAP4X4 XXPYCAP4X4 WTSQCAP6X6 WTPYCAP6X6	WT, BK, TH, VL, GP, FP, RS WT WT
Railings Crown Universal 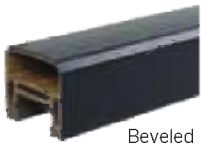 Beveled	6' (1.83 m) Crown Top Rail 8' (2.44 m) Crown Top Rail 6' (1.83 m) Universal Top/Bottom Rail 8' (2.44 m) Universal Top/Bottom Rail 6' (1.83 m) Beveled Top/Bottom Rail *(Actual length of 6' rail is 67.5" (1.72 m). Actual length of 8' rail is 91.5" (2.32 m).)*	XXCROWNTR06 XXCROWNTR08 XXUNIVTBR06 XXUNIVTBR08 XXBEVELTBR06	WT, BK, TH, VL, GP, FP, RS WT, BK, TH, VL, GP, FP, RS WT, BK, TH, VL, GP, FP, RS
Balusters/Spindles 	Square Balusters for 36" Rail Height (16/pack) *[1.418" x 1.418" x30.375" (37 mm x 37 mm x 772 mm) actual dimensions]* Square Balusters for 42" Rail Height (16/pack) *[1.418" x 1.418" x36.375" (37 mm x 37 mm x 924 mm) actual dimensions]* Colonial Spindles for 36" Rail Height (16/pack) *[1.418" x 1.418" x30.375" (37 mm x 37 mm x 772 mm) actual dimensions]* Colonial Spindles for 42" Rail Height (16/pack) *[1.418" x 1.418" x36.375" (37 mm x 37 mm x 924 mm) actual dimensions]* Round Aluminum Balusters for 36" Rail Height (10/pack) *[.75" x 30.375" (19 mm x 772 mm) actual dimensions]* Round Aluminum Balusters for 42" Rail Height (10/pack) *[.75" x 36.375" (19 mm x 924 mm) actual dimensions]* *(See chart below for number of balusters needed to complete each railing section.)*	XX020230SBK XX020236SBK WT020230CSP WT020236CSP BK3Q30RBK BK3Q36RBK	WT, BK, TH, VL, GP, FP, RS WT, BK, TH, VL, GP, FP, RS WT WT BK BK

BALUSTER TYPE	PER 6' SECTION	PER 8' SECTION
Square & Colonial (horizontal application)	13	18
Square & Colonial (stair application)	11	15
Round Aluminum (horizontal application)	15	20
Round Aluminum (stair application)	12	16

XX = INSERT COLOR PREFIX: **BK** Charcoal Black **FP** Fire Pit **GP** Gravel Path **RS** Rope Swing **TH** Tree House **VL** Vintage Lantern **WT** Classic White

TREX TRANSCEND® RAILING SYSTEMS

RAILING SYSTEM	DESCRIPTION	ITEM NUMBER	COLORS
Accessory Infill Kit • 2 Baluster Spacers • Adjustable Foot Block • Mounting Hardware	6' (1.83 m) Accessory Infill Kit for Square/ Colonial Balusters—Horizontal	XXSQHIK06	WT, BK, TH, VL, GP, FP, RS
	6' (1.83 m) Accessory Infill Kit for Square/ Colonial Balusters— Stair	XXSQSIK06	WT, BK, TH, VL, GP, FP, RS
	8' (2.43 m) Accessory Infill Kit for Square/ Colonial Balusters—Horizontal	XXSQHIK08	WT, BK, TH, VL, GP, FP, RS
	8' (2.43 m) Accessory Infill Kit for Square/ Colonial Balusters—Stair	XXSQSIK08	WT, BK, TH, VL, GP, FP, RS
	6' (1.83 m) Accessory Infill Kit for Round Balusters—Horizontal	XXRDHIK06	WT, BK, TH, VL, GP, FP, RS
	6' (1.83 m) Accessory Infill Kit for Round Balusters—Stair	XXRDSIK06	WT, BK, TH, VL, GP, FP, RS
	8' (2.43 m) Accessory Infill Kit for Round Balusters—Horizontal	XXRDHIK08	WT, BK, TH, VL, GP, FP, RS
	8' (2.43 m) Accessory Infill Kit for Round Balusters—Stair	XXRDSIK08	WT, BK, TH, VL, GP, FP, RS
	6' (1.83 m) Glass Panel Accessory Kit *(Glass panel mounting hardware: **glass panel not included**)* ***(6' Rail: 67.5" (1715 mm) actual length; 8' Rail: 91.5" (2324 mm) actual length)***	XXGLIK06	WT, BK, TH, VL, GP, FP, RS
Transcend Accessories • All accessories include a quantity of 12 per box unless otherwise noted.	Mounting Hardware for Cut Rails—Horizontal	XXHZACCYKIT	WT, BK, TH, VL, GP, FP, RS
	Mounting Hardware for Cut Rails—Stair	XXSTACCYKIT	WT, BK, TH, VL, GP, FP, RS
	Transcend RSB Bracket Pack—Horizontal (24/box)	TSHBRACKET	
	Transcend RSB Bracket Pack—Stair (24/box)	TSSBRACKET	
	0° Rail Gasket Pack—Horizontal	XX00HGASK	WT, BK, TH, VL, GP, FP, RS
	0° Rail Gasket Pack—Stair	XX00SGASK	WT, BK, TH, VL, GP, FP, RS
	22.5° Rail Gasket Pack—All profiles	XX22HGAS	WT, BK, TH, VL, GP, FP, RS
	45° Birdsmouth Gasket & RSB Adaptor Kit (for 4 x 4 Crown/Universal)	XX45RSBADAP	WT, BK, TH, VL, GP, FP, RS
	45° Beveled Rail Gasket Pack (for 4 x 4 or 6 x 6)	XX45BEVGASK	WT, BK, TH, VL, GP, FP, RS
	45° Crown/Universal Rail Gasket Kit (for 6 x 6)	WT45HGAS	WT
	Adjustable Foot Blocks (50/box)	XXFTBLK	WT, BK, TH, VL, GP, FP, RS
Rail & Baluster Kit • Crown Top Rail • Universal Bottom Rail • Square Balusters • Baluster Spacers • Adjustable Foot Block • Mounting Hardware **Available in Classic White only.**	6' x 36" Rail & Baluster Kit—Horizontal	WT0636HRK	WT
	6' x 36" Rail & Baluster Kit—Stair	WT0636SRK	WT
	8' x 36" Rail & Baluster Kit—Horizontal	WT0836HRK	WT
	8' x 36" Rail & Baluster Kit—Stair	WT0836SRK	WT
	(6' Rail: 67.5" (1715 mm) actual length: 8' Rail: 91.5" (2324 mm) actual length)		

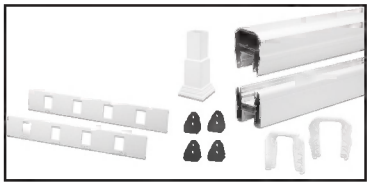

XX = INSERT COLOR PREFIX: **BK** Charcoal Black **FP** Fire Pit **GP** Gravel Path **RS** Rope Swing **TH** Tree House **VL** Vintage Lantern **WT** Classic White

TREX® SELECT™ RAILING

RAILING SYSTEM	DESCRIPTION	ITEM NUMBER	COLORS
Rail and Baluster Kit • Top rail • Bottom rail • Square balusters • Adjustable foot block • Hardware pack 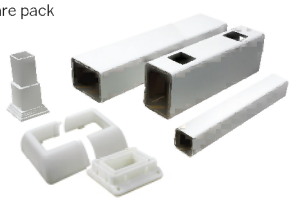	6' x 36" Rail & Baluster Kit—Horizontal 6' x 36" Rail & Baluster Kit—Stair 8' x 36" Rail & Baluster Kit—Horizontal 8' x 36" Rail & Baluster Kit—Stair	WT0636HSELK WT0636SS ELK WT0836HSELK WT0836SS ELK	WT
Select Accessories	Mounting Hardware for Cut Rails—Horizontal (10 kits/box) Mounting Hardware for Cut Rails—Stair (10 kits/box) 45 Degree Adapter Kit (10 kits/box) Adjustable FootBlocks (50/box)	WTHSELCUT WTSS ELCUT WTSEL45ADP WTFTBLK	WT
Bulk Packs 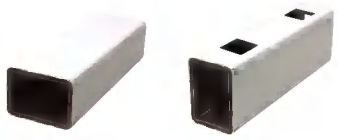	6' Top Rail—Horizontal (10/box) 6' Top Rail—Stair (10/box) 8' Top Rail—Horizontal (10/box) 8' Top Rail—Stair (10/box) 6' Bottom Rail - Horizontal (10/box) 6' Bottom Rail - Stair (10/box) 8' Bottom Rail - Horizontal (10/box) 8' Bottom Rail - Stair (10/box) [6' Rail: 67.5" (1715mm) actual length; 8' Rail: 91.5" (2324 mm) actual length]	WT0636HRK WT0636SRK WT0836HRK WT0836SRK WTSELHBRO6 WTSELSBRO6 WTSELHBRO8 WTSELSBRO8	WT WT WT WT WT WT WT WT
Select Railing System 	Square Balusters For 36" Rail Height (16/pack) [1.125" x 1.125" x 32" (29 mm x 29 mm x 813 mm) actual dimensions] Square Balusters For 42"Rail Height (16/pack) [1.125" x 1.125" x 38" (29 mm x 29 mm x 965 mm) actual dimensions]	WT121230SELBK WT121236SELBK	WT WT

DESIGNER/TRADITIONAL RAILING SPECIFICATIONS AND PROFILES

PART	DESCRIPTION	ITEM NUMBER	COLORS
Posts	4" x 4" x 48" (10.2 cm x 10.2 cm x 121.9 cm) Post Sleeve 4" x 4" x 108" (10.2 cm x 10.2 cm x 274.3 cm) Post Sleeve *(TrexExpress™ template available for quick and accurate assembly)*	XX040448PS XX0404108PS	SD, WB, WG, MB
Post Sleeve Skirt 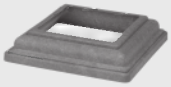	4" x 4" (10.2 cm x 10.2 cm) Post Sleeve Skirt	XXRPSSKIRT	SD, WB, WG, MB
Railings	6' (1.83 m) Top and Bottom Rail Kit* **Includes standard top and bottom rails, baluster for foot block, and mounting hardware.* The 1" (2.5 cm) boards and 2" x 4" (5.1 cm x 10.2 cm) boards needed to accomplish the Traditional railing configuration are listed under "Decking", *see page 27.*	XX06HRK *(Level and stair sections available.)*	SD, WB, WG, MB
Balusters/Spindles 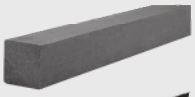	30" (76.2 cm) Square Baluster Kit (16/kit) 36" (91.4 cm) Square Baluster Kit (16/kit) 144" (365.8 cm) Bulk Balusters 32" x 1" (81.3 cm x 2.5 cm) Architectural Baluster Kit (5/kit) 40" x 1" (101.6 cm x 2.5 cm) Architectural Baluster (5/kit) *(Only purchase these when constructing a Transcend or Traditional railing.)* 26" x 3/4" (66 cm x 1.9 cm) Contemporary Baluster Kit (10/kit) 32" x 3/4" (81.3 cm x 1.9 cm) Contemporary Baluster Kit (10/kit) 3/4" (1.9 cm) Contemporary Baluster Connector 3/4" (1.9 cm) Stair Contemporary Baluster Connector	XX020230SBK XX020236SBK XX020212BS210 BK0132VBK BK0140VBK BK3Q26RBK BK3Q32RBK BK075HCON BK075SCON	SD, WB, WG, MB BK BK BK BK BK BK
Post Sleeve Cap 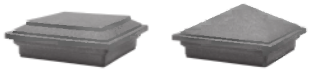	Flat Post Sleeve Cap Pyramid Post Sleeve Cap	XXRPSSQCAP XXRPSPYCAP	SD, WB, WG, MB SD, WB, WG, MB
Designer Railing System			
Top and Bottom Rail Kit • Standard top rail • Standard bottom rail • Baluster for foot block • Mounting hardware	6' (1.83 m) Top and Bottom Rail Kit *(Level and stair sections available.)*	XX06HRK	MB, SD, WB, WG
Designer System Component Parts	Designer Railing Cut Kit 72" (182.9 cm) Top Hand Rail Replacement Kit Designer Railing Sleeve TrexExpress™ Tool	DSRAILKIT XX06THRPL PSTOOL	MB, SD, WB, WG

XX = INSERT COLOR PREFIX: **MB** Madeira **SD** Saddle **WB** Woodland Brown **WG** Winchester Grey

ADA RAILING SPECIFICATIONS AND PROFILES

DESCRIPTION	ITEM NUMBER	COLORS
1 **104" (264.2 cm) Straight rail** 1.5" (3.8) diameter (PVC with aluminum stiffener)	BKADARAIL	Black
2 **Wall Return with Cover Plate** (PVC with aluminum stiffener)	BKADA90WRK	Black
3 **Straight Wall Return** 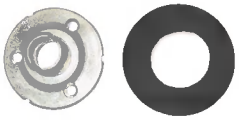	BKADASWRK	Black
4 **Handrail Bracket with Screws and Cap**	BKADARBK	Black
5 **90° Corner** (PVC)	BK90CORN	Black
6 **End Loop** (PVC with aluminum stiffener)	BKADALOOP	Black
7 **Post Return** ("Candy Cane") (PVC with aluminum stiffener)	BKADARET	Black
8 **Straight Joiner** (aluminum) ***NOTE:*** *Not visible.*	STRJOIN	

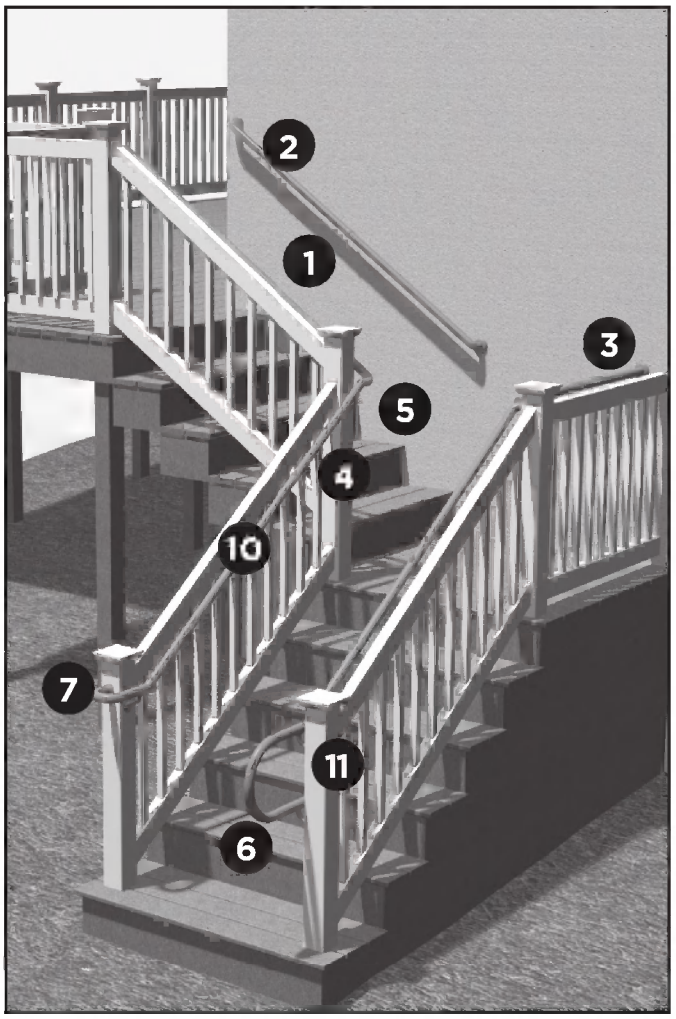

NOTE: *No. 8 straight joiner and No. 9 adjustable joiner are not visible.*

DESCRIPTION	ITEM NUMBER	COLORS
9 **Adjustable Joiner** (aluminum) ***NOTE:*** *Not visible.*	ADJOIN	
10 **Joint Ring** (plastic)	BKJOINRING	Black
11 **Rail End Cap** (plastic)	BKADACAP	Black

COLORS: **BK** Charcoal Black

TREX TRANSCEND® RAILING

NOTES:

» TREX TRANSCEND RAILINGS ARE DESIGNED TO BE INSTALLED OVER THE DECKING FRAME OR ON INSIDE OF RIM JOIST. NOTCHING OF PRESSURE TREATED POSTS OR POSTS INSTALLED ON OUTSIDE OF RIM JOIST ARE NOT ALLOWED.

» All Trex Transcend Railing lengths are manufactured at ON CENTER dimensions (spanning from center of each post): 67-5/8" (176.8 cm) for 6' (1.83 m) on center, and 92-5/8" (235.3 cm) for 8' (2.44 m) on center. Note that railings are designed to be slightly longer that required to allow for very slight play in post placement – some minimal trimming may be required. IT IS VERY IMPORTANT TO MEASURE FIRST.

PARTS

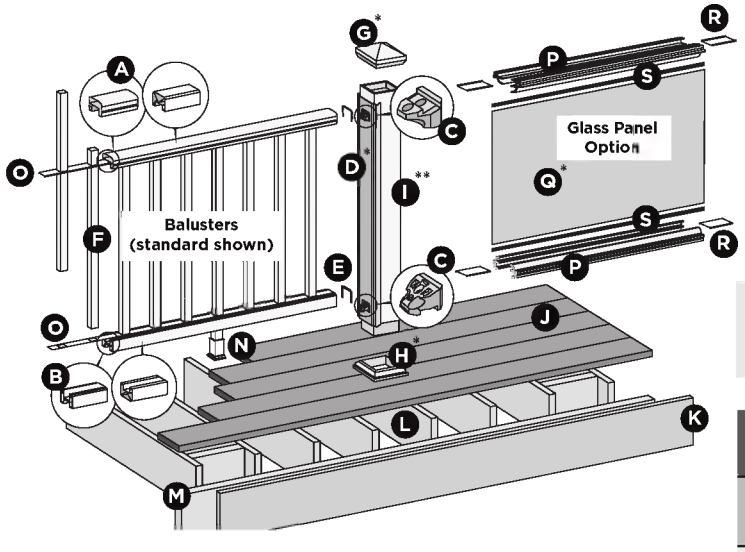

A. Crown, Universal, or Beveled rail
B. Universal or Beveled rail
C. Trex railing support bracket (RSB)
D. TrexExpress™ Railing Assembly Template*
E. Rail gaskets
F. Balusters
G. Post sleeve cap*
H. Post sleeve skirt*
I. Post sleeve - 4" x 4" (10.2 cm x 10.2 cm) or 6" x 6" (15.2 cm x 15.2 cm) post sleeve)**
J. Trex decking
K. TrexTrim™ or Trex fascia
L. Code-approved wood joist - 2" x 8" (5.1 cm x 20.3 cm)
M. Code-approved wood rim joist - 2" x 8" (5.1 cm x 20.3 cm) or larger
N. Adjustable foot block
O. Baluster spacer

Trex Transcend® Glass Panel Parts List

P. Panel support molding
Q. Tempered glass panel*
R. Trex panel support molding spacer
S. Weatherstripping

** Item not included in the Transcend railing kits.*
*** Both 4" x 4" (10.2 cm x 10.2 cm) and 6" x 6" (15.2 cm x 15.2 cm) post sleeves are designed to fit over 4" x 4" pressure-treated post.*

BALUSTER OPTIONS

NOTE: *Pictorial representations shown may only show one style of railing, while others may also be used. Review detailed instructions to determine what railing styles and combinations can be used.*

DETERMINING BALUSTERS NEEDED

Baluster Type	Per 6' OC Section	Per 8' OC Section
Square and Colonial (Horizontal Application)	13	18
Square and Colonial (Stair Application)	11	15
Architectural (Horizontal Application)	14	19
Architectural (Stair Application)	11	15
Contemporary (Horizontal Application)	15	20
Contemporary (Stair Application)	12	16

NOTES: *Basic installation for balusters is the same for all options. When using Architectural or Round Contemporary balusters, use correct baluster spacers.*

*» If using the Contemporary baluster with Transcend railing, also use Contemporary Baluster Connectors (P/N BK075HCON for horizontal applications, BK075SCON for stair applications – **DO NOT** use screws). Use these by placing bottom connector in tight and top connector in approx. 1/2 way. This will allow balusters to fit tight into the rail and will help prevent the balusters from rattling.*

» If using the Architectural baluster with Transcend railing, and rattling of the balusters is a problem, use of a sticky back weather stripping, small foam pipe sleeve, or weather resistant caulking will help eliminate this. All these methods can be done after the railing has been installed if this is determined to be a problem. Unattach the baluster spacer, and use of the above recommendations (if using caulk, make sure to not get any on outside of railing—wipe away excess) and then snap baluster spacer back into place.

NOTE: *If installing 42" (106.7 cm) railing, use longer posts sleeves and measure accordingly to ensure a proper cut.* ***DO NOT CUT TO ACTUAL 42" LENGTH WITHOUT CONFIRMING WHAT STYLE OF RAILING YOU ARE INSTALLING.***

TREX TRANSCEND®
DECK RAILING

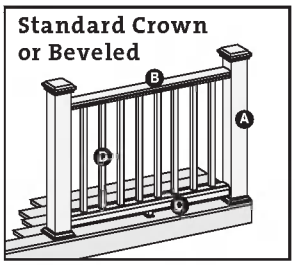

Cutting post sleeves is **NOT** required.
A. Pressure-treated post or Trex post mounts with Trex Transcend post sleeve
B. Crown or Beveled rail
C. Universal bottom or Beveled rail
D. Trex balusters
See page 57 for "How to Install Standard Railing".

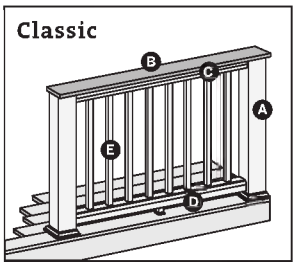

Post sleeves **WILL NEED TO BE CUT**.

POST SLEEVES WILL NEED TO BE CUT

A. Pressure-treated post with Trex Transcend post sleeve
   NOTE: » *Only for use with 4" x 4" (10.2 cm x 10.2 cm) post sleeve.*
   » *Trex Post Mounts (for decking or concrete) cannot be used with Transcend® Classic design.*
B. Deck board top rail. ***NOTE:*** *5" (12.7 cm) Contours and Escapes cannot be used.*
C. Universal top rail
D. Universal bottom or Beveled rail (**DO NOT** use Beveled rail as top rail for this application)
E. Trex balusters
See page 59 for "How to Install Classic Railing".

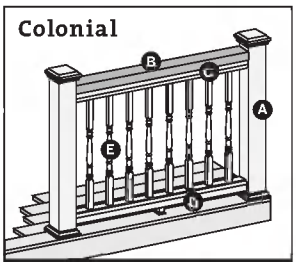

Cutting post sleeves is **NOT** required.
A. Pressure-treated post or Trex post mounts with Trex Transcend post sleeve
B. 2" x 4" (5.1 cm x 10.2 cm) lateral top rail
C. Universal top rail
D. Universal bottom or Beveled rail (**DO NOT** use Beveled rail as top rail for this application)
E. Trex balusters
See page 60 for "How to Install Colonial Railing".

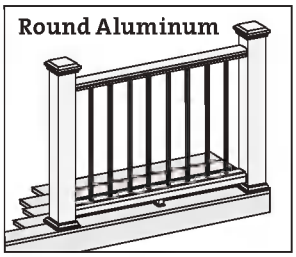

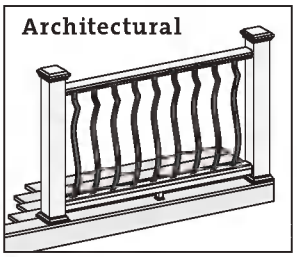

Cutting post sleeves is **NOT** required. Follow instructions for standard Transcend installation, using metal balusters for square balusters.
NOTE: *If using Contemporary balusters with Transcend railing, use Contemporary Baluster Connectors (P/N BK075HCON for horizontal applications, BK075SCON for stair applications – **DO NOT** use screws) as well for stabilizing the balusters (preventing movement of the balusters).*

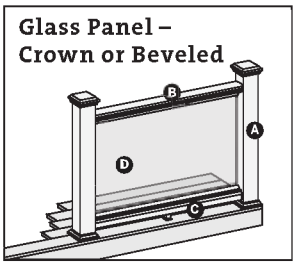

Cutting post sleeves is **NOT** required.
A. Pressure-treated post with Trex Transcend post sleeve. Trex Post Mounts (for decking or concrete) cannot be used with glass panels.
B. Crown rail or Beveled rail (use Universal rail if building Classic or Colonial design with glass inserts)
C. Universal bottom or Beveled rail
D. Tempered glass panel (***NOT** included in kit)*
See page 61 for "How to Install Classic Style Glass Panel Railing". See page 63 for "How to Install Colonial Style Glass Panel Railing". See page 65 for "How to Install Colonial Style Glass Panel Railing".
NOTE: *Glass panels are **NOT** recommended in stair applications.*

HOW TO INSTALL STANDARD CROWN OR BEVELED RAILING
TREX TRANSCEND®

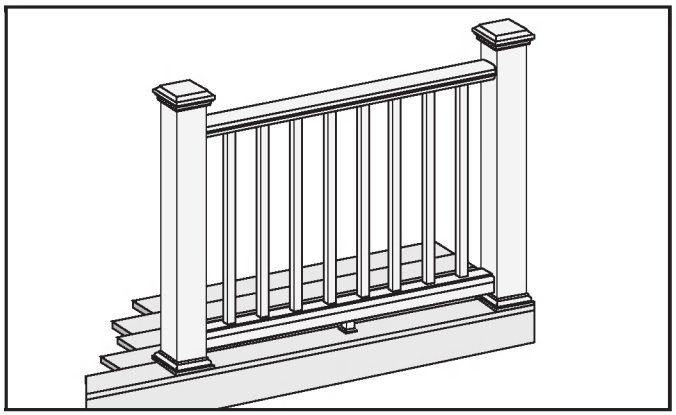

Read all instructions BEFORE installation.

Important: Post sleeves are **NOT** to be cut for this design style.

Installing Pressure-Treated Posts

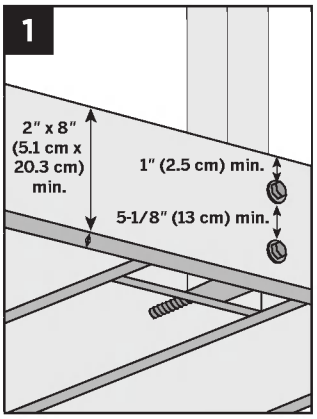

» **Posts are to be installed 6' (1.83 m) or 8' (2.44 m) on center to accommodate appropriate railing length.**
» Attach posts using 1/2" (1.3 cm) carriage bolts.
» Minimum joist size is 2" x 8" (5.1 cm x 20.3 cm).
» Top bolts must be 1" (2.5 cm) from tops of joists.
» Bottom bolts must be 5-1/8" (13 cm) from top bolts.

NOTE: *Blocking can be added for extra strength.*

Installing Post Sleeve Skirts and Post Sleeves

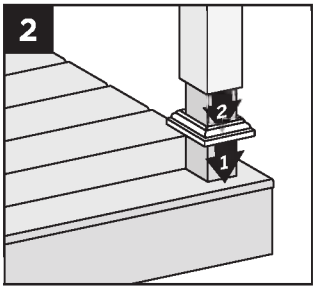

2. Slide post sleeve skirt over post and down to rest on decking surface. Slide post sleeve over post and position inside post sleeve skirt.

NOTE: *Shims can be used to plumb post sleeves.*

Installing Railing Support Brackets (RSBs)

Option 1: Without TrexExpress™ Railing Template

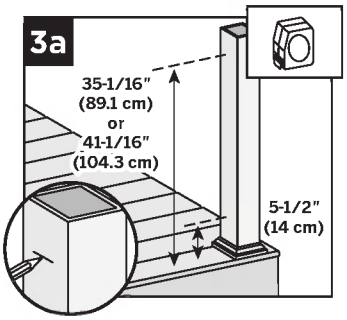

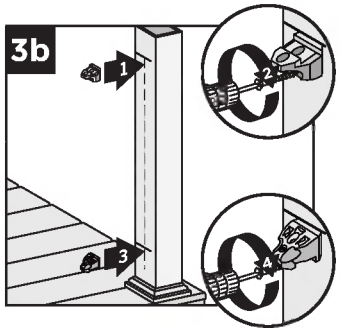

3a. Mark 5-1/2" (14 cm) and 35-1/16" (89.1 cm) from deck surface **OR** for 42" (106.7 cm) height, mark 5-1/2" (14 cm) and 41-1/16" (104.3 cm) from the deck surface.
3b. Place RSBs directly under marks, center on posts, and secure with 2" (5.1 cm) wood screws (provided with post sleeve). **Place top RSBs flat side UP, bottom RSBs flat side DOWN.**

Option 2: With TrexExpress™ Railing Template

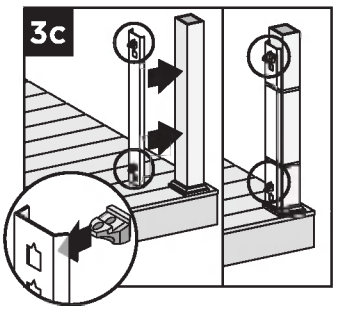

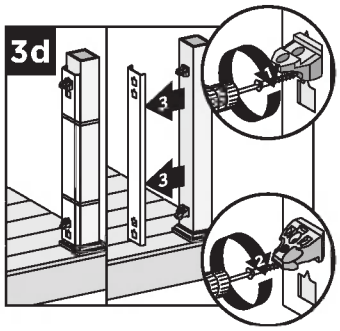

3c. Place RSBs in template. **Place top RSBs flat side UP, bottom RSBs flat side DOWN.** Secure template on post with tape or rubber band, with bottom of template resting on post skirt.
3d. Secure RSBs with 2" (5.1 cm) wood screws (provided in railing kit) and remove template.

NOTE: *Special steps are necessary when using 6" x 6" (15.2 cm x 15.2 cm) plastic TrexExpress™ template.*
» *Cut off 1/2" (1.3 cm) from the bottom (blue arrows up) of the tool **BEFORE** first use.*
» *Position top RSBs **ONLY**, 6"(15.2 cm) higher for 42" (106.7 cm) rail height.*
» *Secure RSBs with 2-1/2" (6.4 cm) wood screws (provided with post sleeve) and remove template.*

Cutting Railings

4. Measure between posts and cut rails to same length.

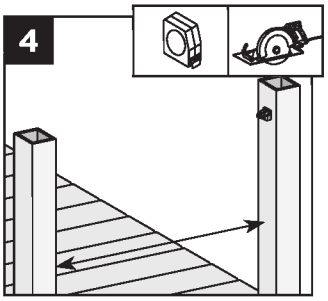

NOTES:

» If using optional rail gaskets, subtract 1/16" (0.15 cm) from each end.
» Attach baluster spacers to railing before cutting to allow for cleaner cut and less work.
» When measuring, cut equal lengths from each side of railing and baluster spacer to ensure equal spacing of balusters per each railing section.
» In some cases, the gasket can be attached before tightening railing to RSB.
» **If gaskets are tight, use a small flat head screwdriver to compress the tabs of the gasket if they are stuck outside the rail.**

Attaching Bottom Rail (Universal or Beveled Rail) and Foot Block

NOTES

» ***IF INSTALLING BEVELED RAILING REFER TO PAGE 72 PRIOR TO INSTALLING FOOTBLOCK AS FOOTBLOCK MAY HAVE TO BE TRIMMED.***

» ***FOOT BLOCKS COME WITH SPECIFIC INSTRUCTIONS ON HOW TO ATTACH THESE TO DESIGNATED RAILINGS - ALSO REFER TO THESE INSTRUCTIONS AS WELL.***

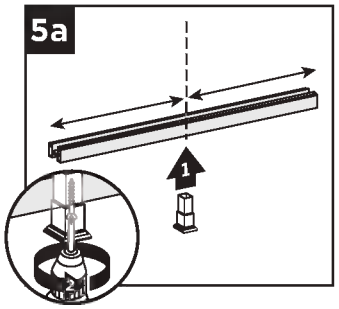

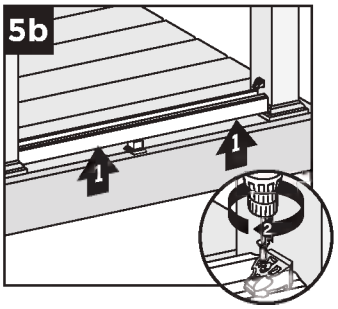

5a. Center foot block in Universal rail channel or on beveled bottom rail and attach. **DO NOT** extend foot block.
5b. Lift bottom rail so RSBs are in the channel and attach with self-tapping screws *(provided)*.

5c. Telescope foot block down and screw through opposite sides. Place screw plugs.

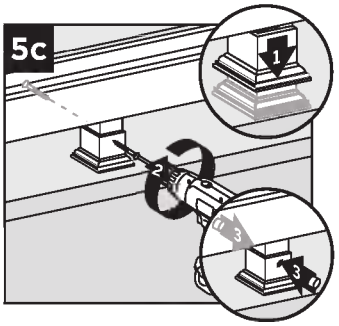

Placing Baluster Spacers and Balusters

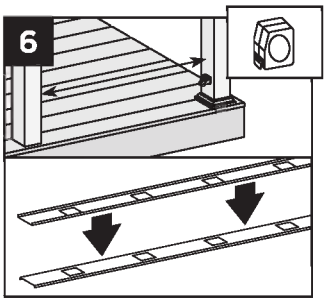

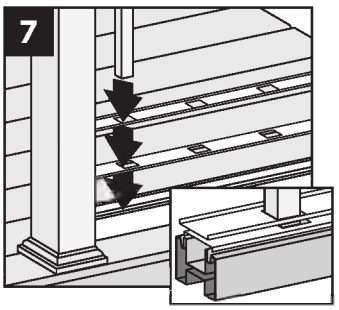

6. Cut baluster spacers the same length as rails, equally spaced so the holes line up.
7. Snap baluster spacer into bottom rail. Place inverted baluster spacer on top of first baluster spacer. Place balusters in baluster spacer holes.

NOTES: *If using Contemporary balusters, also use Contemporary baluster connectors to ensure a tight fit of the balusters (this will help prevent balusters from rattling).*

» *Install without using screws (screws are included in connector packaging and screws are used only with Designer Railing).*

» *Install bottom connector tight into Contemporary baluster.*

» *Install top connector approximately half way into Contemporary baluster.*

» *Contemporary balusters should then have a snug fit when placing into the baluster spacers in the horizontal position—if not adjust the depth of the connector.*

HOW TO INSTALL STANDARD CROWN OR BEVELED RAILING/CONTINUED
TREX TRANSCEND®

Attaching Top Rail – Crown or Beveled Rail

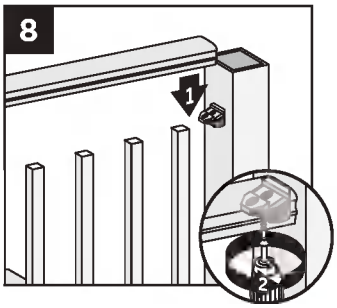

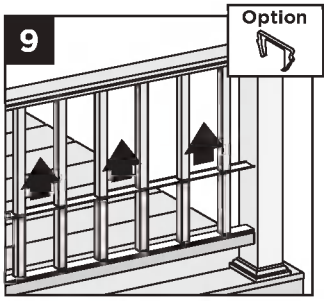

8. Place crown or Beveled rail on RSBs with balusters in rail channels. Attach top rail to RSB with two self-tapping screws (provided).
9. Slide baluster spacer up and snap into top rail. Place optional top rail gaskets on each end of rail.

Attaching Post Caps

10. Secure post caps with silicone or PVC adhesive.

NOTE: *Clean-up any excess adhesive before drying.*

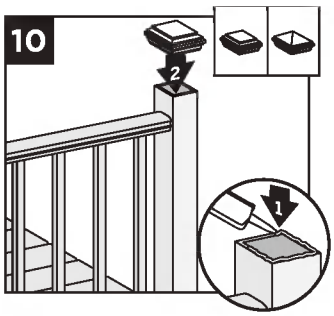

HOW TO INSTALL CLASSIC RAILING
TREX TRANSCEND®

NOTE: *Beveled rail cannot be used as top rail in this application.*

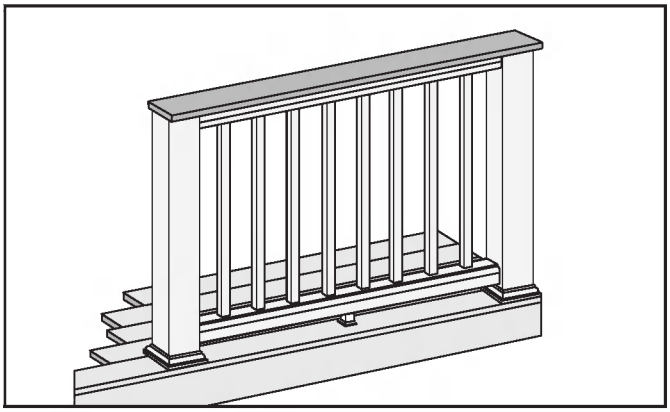

Important: ONLY use with 4″ x 4″ (10.2 cm x 10.2 cm) post and post sleeve. Cutting post and post sleeve **ONLY** apply to the Classic style railing.

1. **Installing Pressure-Treated Posts**
   See instructions on page 57.

Cutting Post and Post Sleeve

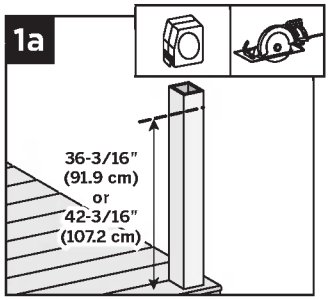

1a. Mark and cut post and post sleeve measuring from deck surface:
   » 36-3/16″ (91.9 cm) for 36″ (91.4 cm) height.
   » 42-3/16″ (107.2 cm) for 42″ (106.7 cm) height.

2. **Installing Post Sleeve Skirts and Post Sleeves** *See instructions on page 57.*

3. **Installing Railing Support Brackets (RSBs)**
   See instructions on page 57.

4. **Cutting Railings**
   See instructions on page 58.

5. **Attaching Bottom Rail (Universal or Beveled Rail) and Foot Block**
   See instructions on page 58.

6-7. **Placing Baluster Spacers and Balusters**
   See instructions on page 58.

Attaching the Inverted Universal Rail as Top Rail

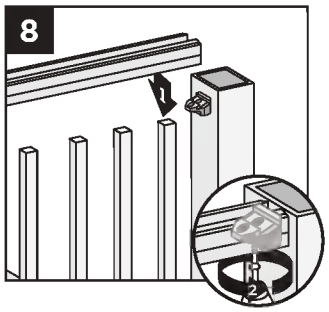

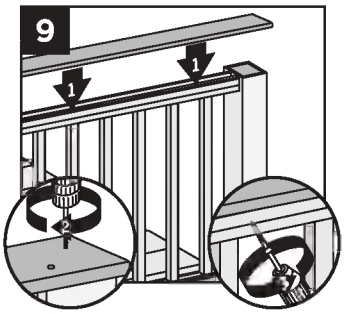

8. Place inverted Universal rail onto RSBs with balusters in channel. Attach Universal rail to RSBs with two self-tapping screws *(provided)*.
9. Place deck boards *(**DO NOT** use Escapes, Select, or Contour deck boards for top rail)* over Universal rails. Attach boards on each post with Trex-recommended composite screws *(see page 29 of the Trex 2012 Installation Manual)* at a diagonal. Secure boards to Universal rails with 2″ (5.1 cm) pan-head screws *(not provided)* at an angle every 16″ (40.6 cm) on center.

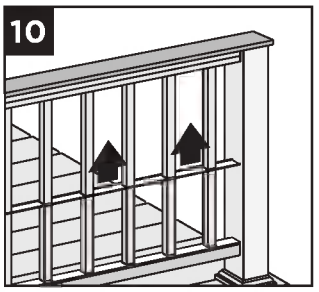

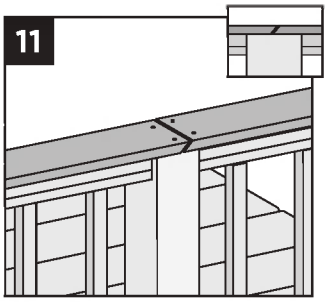

10. Slide baluster spacers up and snap into Universal rails.

NOTE: *If necessary, cut tips off rail gaskets prior to installation.*

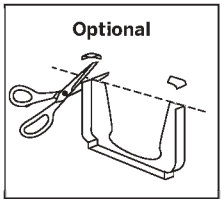

11. Use scarf cut for posts where two deck boards meet.

NOTE: *If installing in weather below 40°F (4.5°C), leave 1/8″ (0.3 cm) gap between deck boards.*

HOW TO INSTALL COLONIAL RAILING
TREX TRANSCEND®

NOTE: *Beveled rail cannot be used as top rail in this application.*

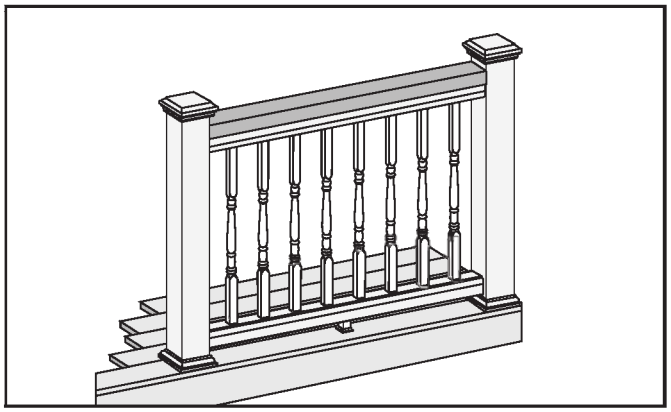

1. **Installing Pressure-Treated Posts**
   See instructions on page 60.
2. **Installing Post Sleeve Skirts and Post Sleeves** *See instructions on page 57.*
3. **Installing Railing Support Brackets (RSBs)**
   See instructions on page 57.
4. **Cutting Railings**
   See instructions on page 58.
5. **Attaching Bottom Rail (Universal or Beveled Rail) and Foot Block**
   See instructions on page 58.

6-7. **Placing Baluster Spacers and Balusters**
   See instructions on page 58.

HOW TO INSTALL COLONIAL RAILING/CONTINUED
TREX TRANSCEND®

Attaching Inverted Universal Rail as Top Rail

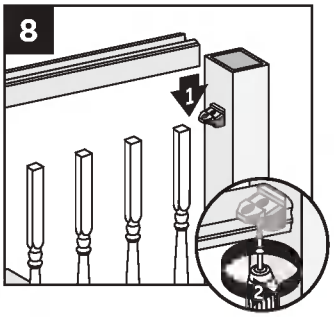

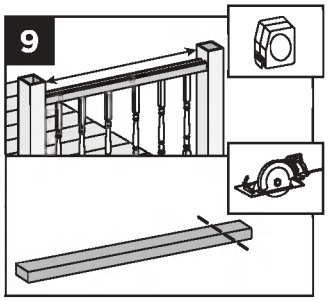

8. Place inverted Universal rail onto RSBs with balusters in channel. Attach Universal rail with two self-tapping screws *(provided)*.
9. Measure between posts and cut 2″ x 4″ (5.1 cm x 10.2 cm) to length.
10. Place 2″ x 4″ (5.1 cm x 10.2 cm) on Universal rail. Attach board to rail with 2″ (5.1 cm) pan-head screws *(not provided)* every 16″ (40.6 cm) on center.

    Pre-drill a pilot hole and toenail 2-1/2" (6.4 cm) screw at each end of 2″ x 4″ (5.1 cm x 10.2 cm) into post on back side of rail (side not facing decking).

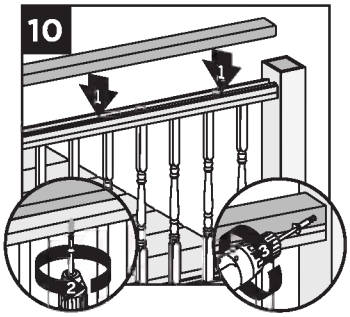

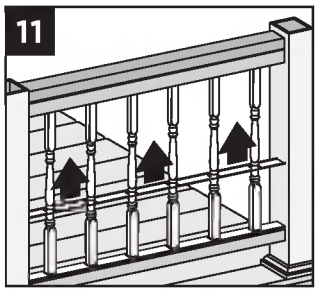

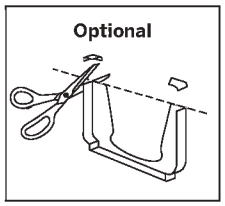

11. Slide baluster spacer up and snap into Universal rail.

NOTE: *If necessary, cut tips off rail gaskets prior to installation.*

Attaching Post Caps

12. Secure post cap with silicone or PVC adhesive.

NOTE: *Clean-up any excess adhesive before drying.*

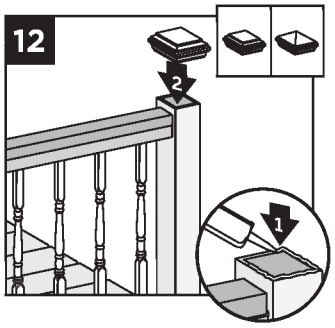

HOW TO INSTALL STANDARD GLASS PANEL CROWN OR BEVELED RAILING
TREX TRANSCEND®

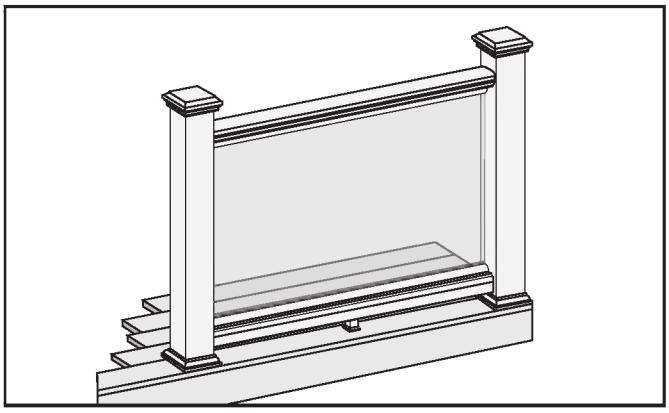

NOTES: Read all instructions BEFORE installation.

» You must purchase the 1/4″ (0.6 cm) tempered glass panels. *See dimensions on right.*

» Glass panels **ONLY** for use with maximum 6′ (1.83 m) on center post spacing.

» ***NOT*** *recommended for stair applications.*

TEMPERED GLASS PANEL DIMENSIONS
» **36″ (91.4 cm) high rail:** 1/4″ x 30″ x 63-1/2″ max. (0.6 cm x 76.2 cm x 161.3 cm)
» **42″ (106.7 cm) high rail:** 1/4″ x 36″ x 63-1/2″ max. (0.6 cm x 91.4 cm x 161.3 cm)

HOW TO INSTALL STANDARD GLASS PANEL CROWN OR BEVELED RAILING/CONTINUED
TREX TRANSCEND®

1. **Installing Pressure-Treated Posts**
   See instructions on page 57.

2. **Installing Post Sleeve Skirts and Post Sleeves** *See instructions on page 57.*

3. **Installing Railing Support Brackets (RSBs)**
   See instructions on page 57.

4. **Cutting Railings**
   See instructions on page 58.

5. **Attaching Bottom Rail (Universal or Beveled rail) and Foot Block**
   See instructions on page 58.

Attach Weatherstripping and Positioning Panel

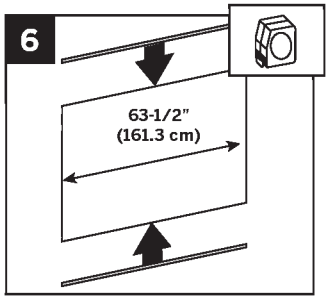

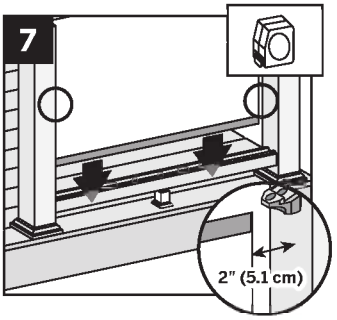

6. Push black-edged trim onto upper and lower edges of panel. Be sure trim runs entire length of glass. Extra trim can be cut with razor blade or scissors.

7. Position panel with weatherstripping into lower rail channel. Center panel between posts with about 2" (5.1 cm) of air space on each side of panel.

Attaching Top (Crown or Beveled) Rail and Panel Support Molding

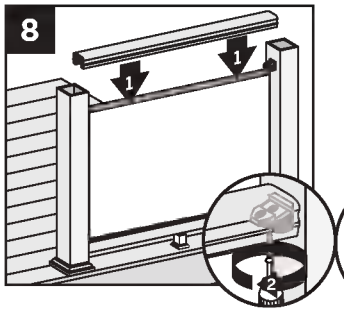

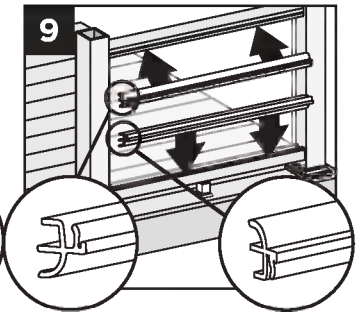

8. Place top rail over RSB brackets and glass panel. Secure rail to RSBs with 1-1/2" (3.8 cm) self-drilling screws *(provided)*.

NOTE: *Avoid hitting glass panel while using the drill.*

9. Push PSM into rail to complete snap connection. Lower rail PSM edge rests on top of rail. Top rail PSM snaps flush into rail. If using Beveled rails, the PSM will rest on the edges on the rail.

Hiding Brackets

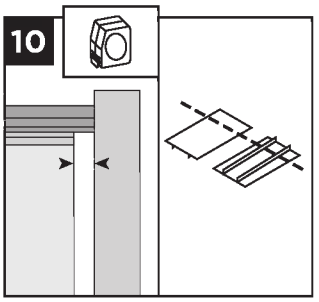

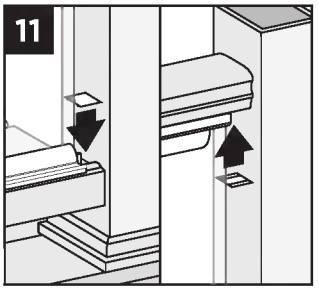

10. Cut Transcend baluster spacer into four lengths equal to distance between the glass panel and posts. Cut slowly and one at a time, to avoid chipping.
11. Snap spacer into bottom and top rail to hide brackets and create a seamless look.

Attaching Post Caps

12. Secure post caps with silicone or PVC adhesive.

NOTE: *Clean-up any excess adhesive before drying.*

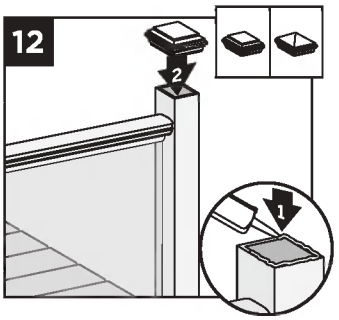

HOW TO ATTACH CLASSIC STYLE GLASS PANEL RAILING
TREX TRANSCEND®

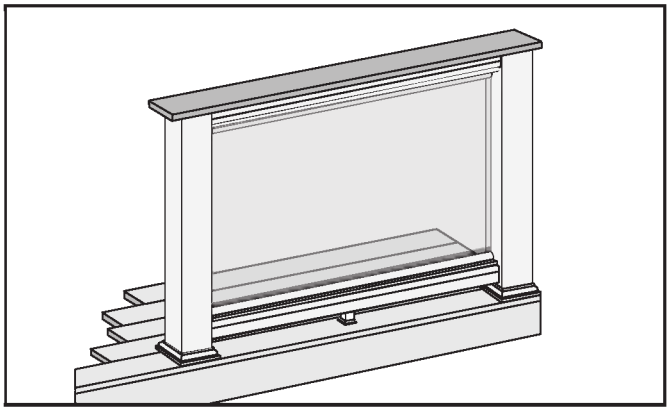

NOTES: Read all instructions BEFORE installation.

» You must purchase the 1/4" (0.6 cm) tempered glass panels. *See dimensions below.*
» Glass panels **ONLY** for use with maximum 6' (1.83 m) on center post spacing.
» ***NOT*** *recommended for stair applications.*

TEMPERED GLASS PANEL DIMENSIONS

» **36" (91.4 cm) high rail:**
1/4" x 30" x 63-1/2" max.
(0.6 cm x 76.2 cm x 161.3 cm)

» **42" (106.7 cm) high rail:**
1/4" x 36" x 63-1/2" max.
(0.6 cm x 91.4 cm x 161.3 cm)

1. **Installing Pressure-Treated Posts**
See instructions on page 57.

NOTE: *If installing glass with Classic Rail Design, rail posts and post sleeves must be cut.*

Cutting Post and Post Sleeve

1a. Mark and cut post and post sleeve measuring from deck surface:
» 36-3/16" (91.9 cm) for 36" (91.4 cm) height.
» 42-3/16" (107.2 cm) for 42" (106.7 cm) height.

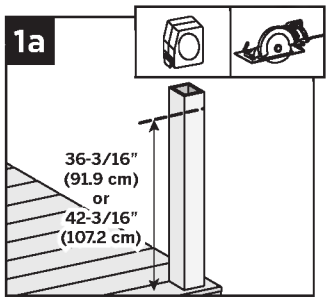

2. **Installing Post Sleeve Skirts and Post Sleeves**
See instructions on page 57.

3. **Installing Railing Support Brackets (RSBs)**
See instructions on page 57.

4. **Cutting Railings**
See instructions on page 58.

5. **Attaching Bottom Rail (Universal or Beveled rail) and Foot Block**
See instructions on page 58.

Attach Weatherstripping and Positioning Panel

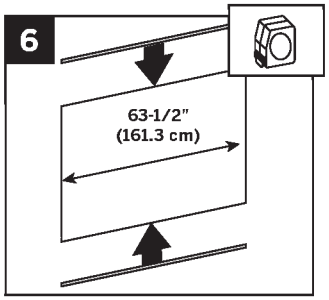

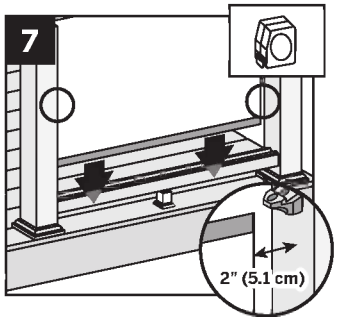

6. Push black-edged trim onto upper and lower edges of panel. Be sure trim runs entire length of glass. Extra trim can be cut with razor blade or scissors.

7. Position panel with weatherstripping into lower rail channel. Center panel between posts with about 2" (5.1 cm) of air space on each side of panel.

Attaching Top Rail and Panel Support Molding

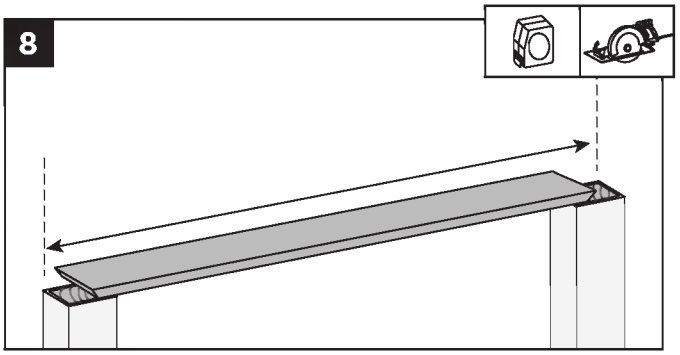

8. Cut deck boards to appropriate length of railing span, remembering to include extra space on each side of the deck board to allow for attachment to the post. Decking boards must cover 1/2 of the pressure treated post to allow this to be fastened later. If you include extra decking material on each side this can be cut off later if need be.

HOW TO ATTACH CLASSIC STYLE GLASS PANEL RAILING/CONTINUED
TREX TRANSCEND®

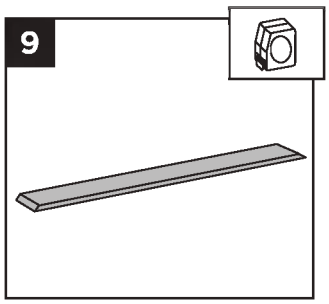

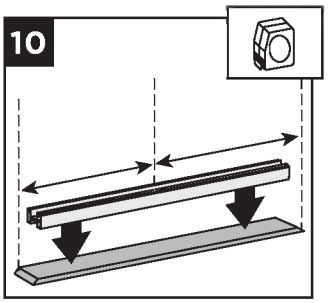

9. Place inverted deck board (place top side of deck board down) on clean, flat surface. (**DO NOT** use Escapes, Select, or Contour deck boards for top rail.)

10. Place Universal rail (remembering to orient this properly so that when flipped over the Universal rail will accept the baluster spacer and balusters), on the deck board, centered in both directions to allow for final attachment to post.

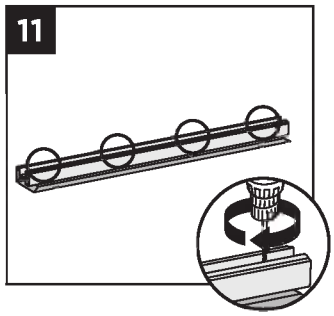

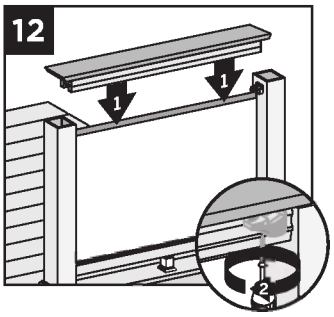

11. Secure deck board to Universal rail with 2″ (5.1 cm) pan head screws (not provided) approximately every 16″ (40.6 cm) on center. (**DO NOT** overtighten.)

12. Place inverted Universal rail with deck board attached onto RSB's with glass panel in the channel. Attach Universal rail to RSB's with two self-tapping screws (provided).

13. Attach deck board to post (ensure that screws are attached to wood post) with Trex recommended composite screws at a diagonal.

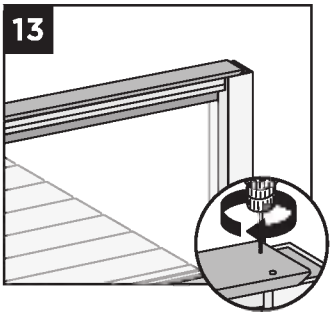

14. Install four panel support moldings (PSM) into rails to complete snap connection. Both the top and bottom PSM edges rest on the lip of the rails for both Universal and Beveled rails.

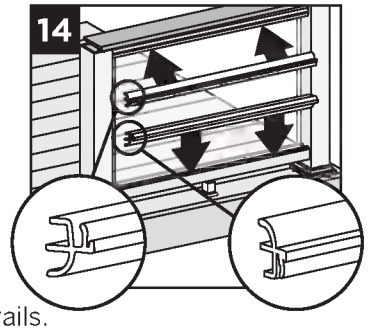

Hiding Brackets

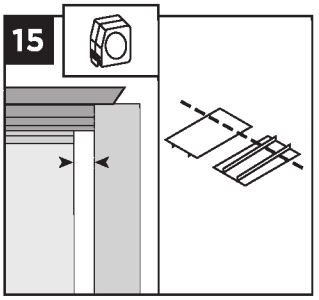

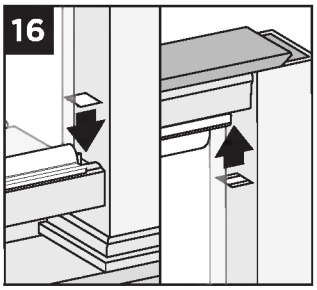

15. Cut Transcend baluster spacer into four lengths equal to distance between the glass panel and posts. Cut slowly and one at a time, to avoid chipping.

16. Snap spacer into bottom and top rail to hide brackets and create a seamless look.

HOW TO ATTACH COLONIAL STYLE GLASS PANEL RAILING
TREX TRANSCEND®

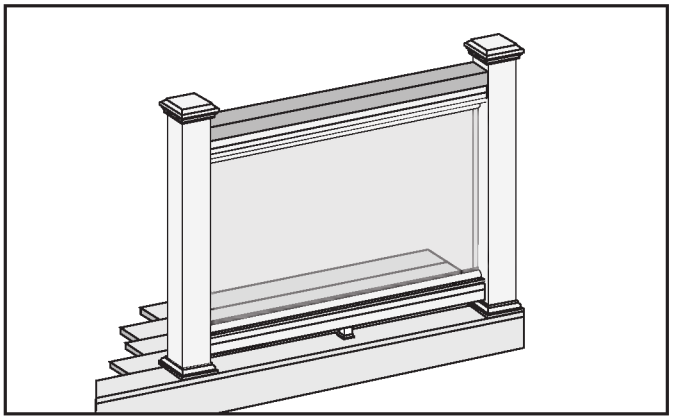

NOTES: Read all instructions BEFORE installation.

» You must purchase the 1/4″ (0.6 cm) tempered glass panels. *See dimensions below.*

» Glass panels **ONLY** for use with maximum 6′ (1.83 m) on center post spacing.

» ***NOT*** *recommended for stair applications.*

TEMPERED GLASS PANEL DIMENSIONS

» **36″ (91.4 cm) high rail:**
1/4″ x 30″ x 63-1/2″ max.
(0.6 cm x 76.2 cm x 161.3 cm)

» **42″ (106.7 cm) high rail:**
1/4″ x 36″ x 63-1/2″ max.
(0.6 cm x 91.4 cm x 161.3 cm)

1. **Installing Pressure-Treated Posts**
See instructions on page 57.

2. **Installing Post Sleeve Skirts and Post Sleeves**
See instructions on page 57.

3. **Installing Railing Support Brackets (RSBs)**
See instructions on page 57.

4. **Cutting Railings**
See instructions on page 58.

5. **Attaching Bottom Rail (Universal or Beveled rail) and Foot Block**
See instructions on page 58.

Attach Weatherstripping and Positioning Panel

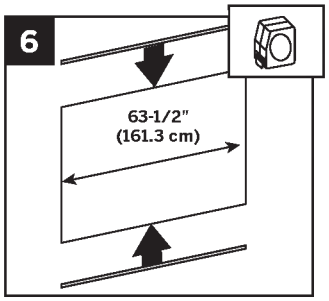

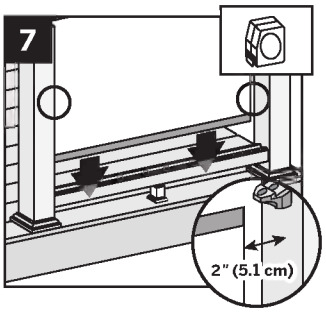

6. Push black-edged trim onto upper and lower edges of panel. Be sure trim runs entire length of glass. Extra trim can be cut with razor blade or scissors.

7. Position panel with weatherstripping into lower rail channel. Center panel between posts with about 2″ (5.1 cm) of air space on each side of panel.

Attaching Top Rail and Panel Support Molding

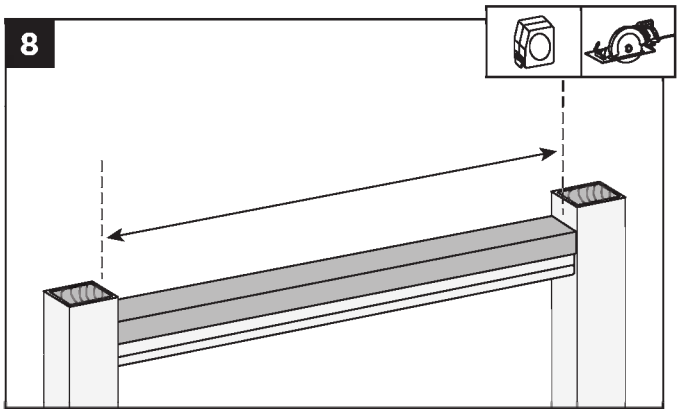

8. Cut 2″ x 4″ (5.1 cm x 10.2 cm) to same length of the inverted Universal rail.

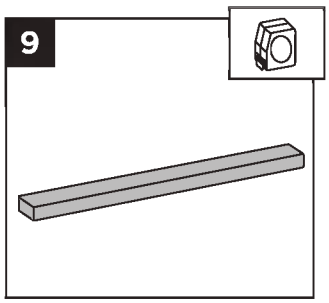

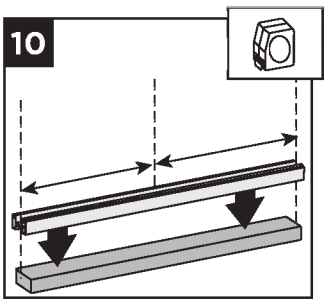

9. Place inverted 2″ x 4″ (5.1 cm x 10.2 cm) (place top side down) on clean, flat surface.

10. Place Universal rail (remembering to orient this properly so that when flipped over the Universal rail will accept the baluster spacer and balusters), on the 2″ x 4″ (5.1 cm x 10.2 cm), centered.

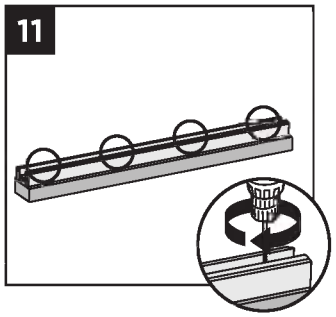

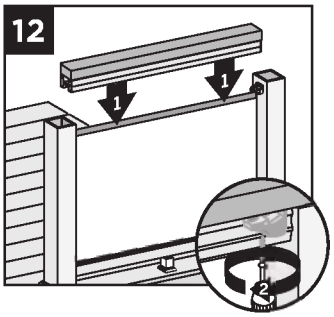

11. Secure 2″ x 4″ (5.1 cm x 10.2 cm) to Universal rail with 2″ (5.1 cm) pan head screws (not provided) approximately every 16″ (40.6 cm) on center.

12. Place inverted Universal rail with 2″ x 4″ (5.1 cm x 10.2 cm) attached onto RSB's with glass panel in the channel. Attach Universal rail to RSB's with two self-tapping screws (not provided).

13. Predrill a pilot hole and toenail 2-1/2″ (6.4 cm) screw at each end of the 2″ x 4″ (5.1 cm x 10.2 cm) into post on back side (side not facing decking).

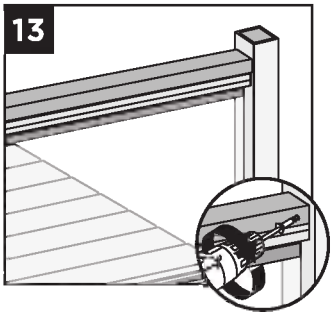

14. Install four panel support moldings (PSM) into rails to complete snap connection. Both the top and bottom PSM edges rest on the lip of the rails for both Universal and Beveled rails.

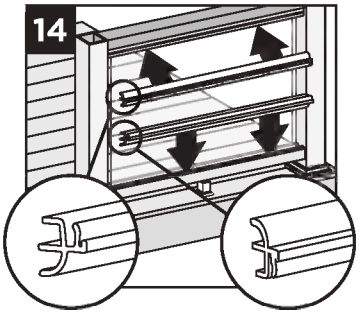

Hiding Brackets

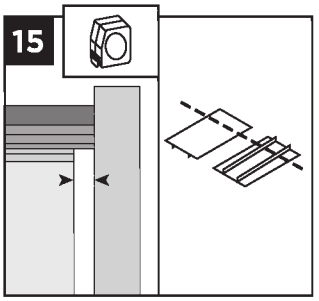

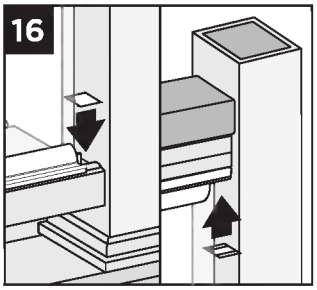

15. Cut Transcend baluster spacer into four lengths equal to distance between the glass panel and posts. Cut slowly and one at a time, to avoid chipping.
16. Snap spacer into bottom and top rail to hide brackets and create a seamless look.

Attaching Post Caps

17. Secure post caps with silicone or PVC adhesive.

NOTE: *Clean-up any excess adhesive before drying.*

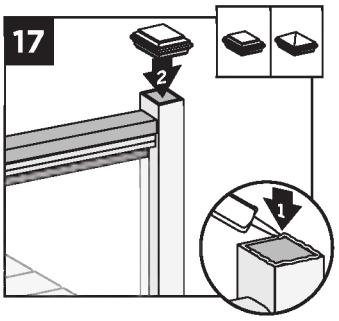

HOW TO INSTALL ON-AN-ANGLE RAILING
TREX TRANSCEND® (CROWN AND UNIVERSAL RAILING)

NOTE: *Trex Railing brackets are designed to be installed up to a 45° angle.*

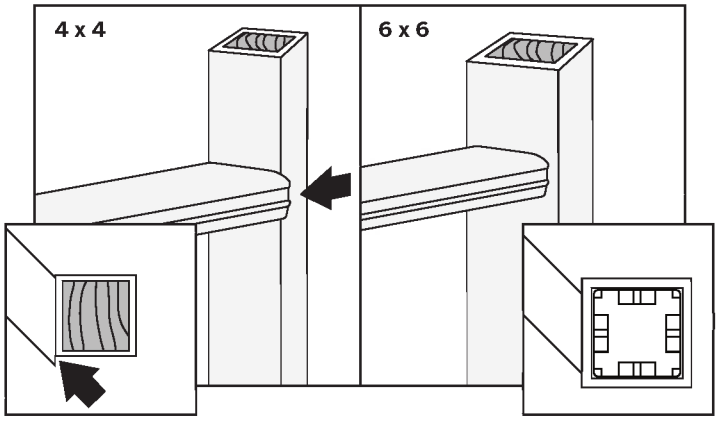

» **Small angles** (1° - 30°). Both 4″ x 4″ (10.2 cm x 10.2 cm) or 6″ x 6″ (15.2 cm x 15.2 cm) post sleeves work well.
» **Large angles** (31° - 45°). **USE ONLY** 6″ x 6″ (15.2 cm x 15.2 cm) post sleeves when installing on flat side.
» **45° angles** using 4″ x 4″ (10.2 cm x 10.2 cm) post sleeves **MUST** use Transcend bird's mouth brackets.

NOTE: *Railing will be installed on corner of posts.*

» Using 6″ x 6″ (15.2 cm x 15.2 cm) post sleeves at 45° angles. Brackets are installed off-center and use 45° Transcend gaskets.

» Railing gaskets are designed to fit at 0°, 22.5°, and 45° angles. Gaskets are labeled with appropriate angle dimension.

HOW TO INSTALL ON-AN-ANGLE RAILING
TREX TRANSCEND® (BEVELED RAILING)

NOTE: *Trex railing brackets are designed to be installed up to a 45° angle.*

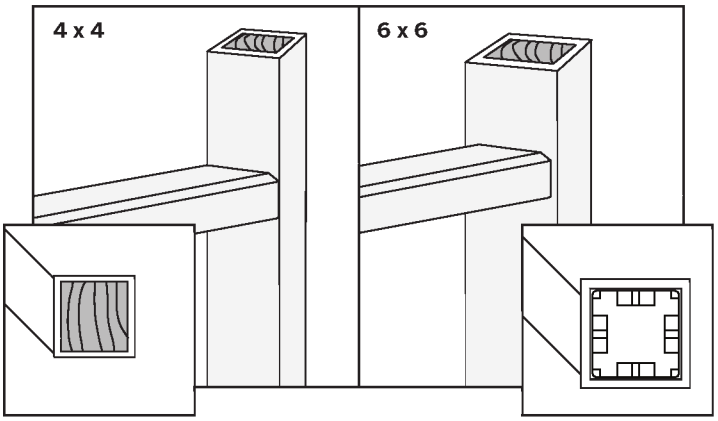

» **Angle Range** (1° - 45°). Both 4″ x 4″ (10.2 cm x 10.2 cm) or 6″ x 6″ (15.2 cm x 15.2 cm) post sleeves work well.

» If installing at 45 degree angles, using 4″ x 4″ (10.2 cm x 10.2 cm) or 6″ x 6″ (15.2 cm x 15.2 cm) post sleeves, install brackets slightly off-center to allow actual railing to be centered on the post sleeve.

» Horizontal railing gaskets are designed to fit at 0°, 22.5°, and 45° angles. Gaskets are labeled in order to ensure correct location.

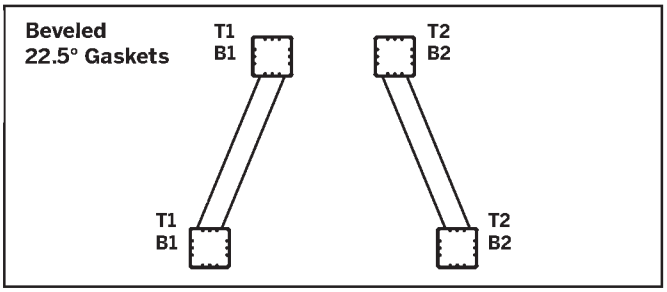

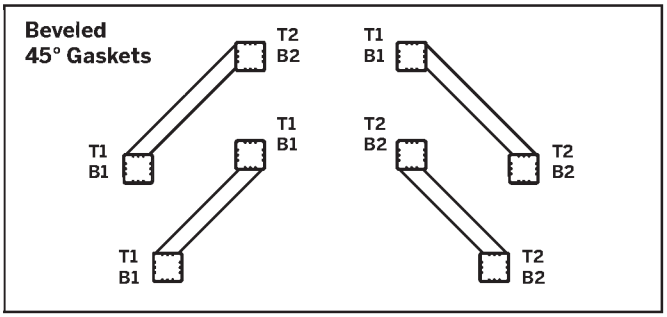

HOW TO INSTALL CROWN, UNIVERSAL AND BEVELED BIRD'S MOUTH RAILING

TREX TRANSCEND®

NOTES:

» *Use with 4" x 4" (10.2 cm x 10.2 cm) post sleeve **ONLY**.*

» *Gaskets are only designed for use with Transcend Crown and Universal railing (not Beveled railing).*

Read all instructions BEFORE installation.

PARTS

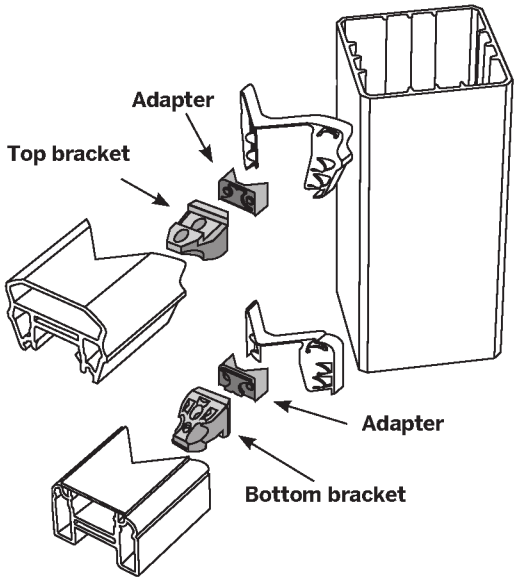

Mark Posts

1. Measure and mark 4" (10.2 cm) and 33-9/16" (85.2 cm) up from top of post skirt. For a 42" (106.7 cm) rail, top mark is 39-9/16" (100.5 cm) on post.

NOTE: *Without skirt,add 1-1/2" (3.8 cm) to measurements.*

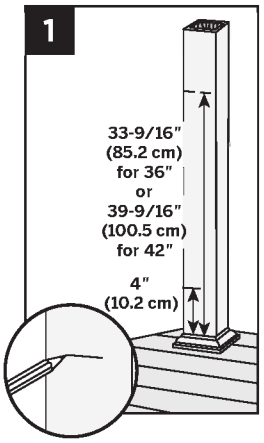

Attaching Adapters

Snap adapters into RSBs.

Pre-drill Bottom and Top RSBs

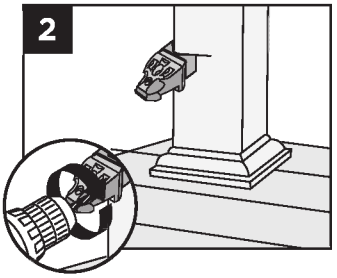

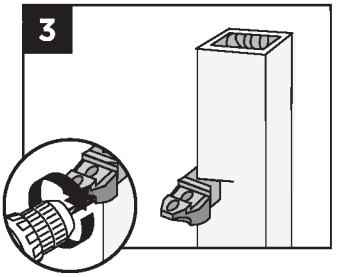

2. Position RSBs with adapter **(flat side DOWN)** for lower rail, mark and pre-drill screw holes with 1/8" (0.3 cm) drill bit on post.
3. Position RSBs with adapter **(flat side UP)** for top rail, mark and pre-drill screw holes with 1/8" (0.3 cm) drill bit on post.

Measuring and Cutting Rails

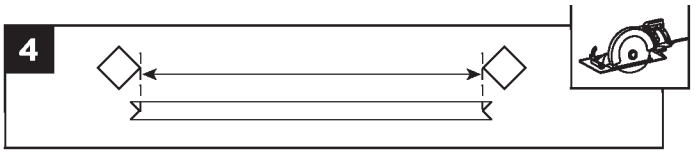

4. Measure from corner-to-corner between posts. Mark 45° cuts on rails with template on assembly tool. Center of "V's" is the distance from corner-to-corner for posts.

NOTE: *Subtract 1/16" (0.15 cm) from each end to accommodate rail gaskets.*

Attaching Top and Bottom RSBs

5. Attach RSBs with adapters to posts with wood screws *(provided)*.

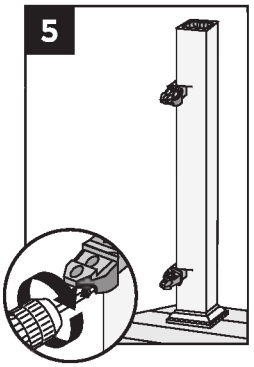

NOTES:

» *Drill at slight inward angle to drill holes on marks.*

» *Lay cut lower rail into position on decking surface between the posts before attaching the lower RSB. There may be some difficulty attaching the lower rail if you fail to do this.*

Installing Railings to RSB's

6. Attach with self-tapping screws *(provided)*.

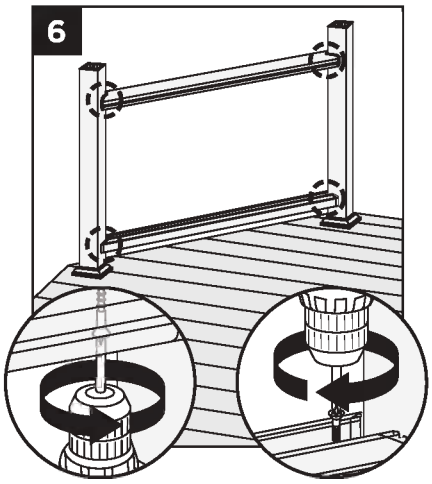

Using Miter Box Saw to Cut Rails

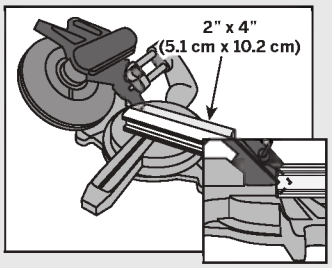

1. Place 2" x 4" (5.1 cm x 10.2 cm) on edge behind the rail to allow for complete cut.
2. Angle blade to 45°.
3. Set stop on saw so blade travels half the depth of rails. Several test cuts can be made on scrap material to accurately set the stop.
4. "V" cut both sides of the rail.

NOTE: *Transcend's crown, Universal, as well as Beveled rails will require different stop settings.*

HOW TO INSTALL CROWN, UNIVERSAL, AND BEVELED STAIR RAILING
TREX TRANSCEND®

Read all instructions BEFORE installation.

NOTE: *All Transcend railings and gaskets work* ***ONLY WITH STAIR SLOPES OF 32°-37°****.*

Installing Posts, Post Sleeve Skirts, and Post Sleeves for Stair Rails

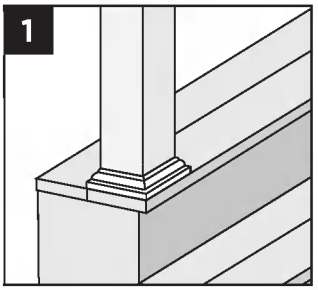

1. Install posts, post sleeve skirts, and post sleeves according to standard Transcend railing instructions. *See page 57.*
   » In most cases, a post and post sleeve longer than 39″ (99.1 cm) will be needed on the lower section of stair rail to accommodate stair angle.
   » Make sure top and bottom posts for stairs are installed at nose of each tread.

Measuring and Cutting Railings

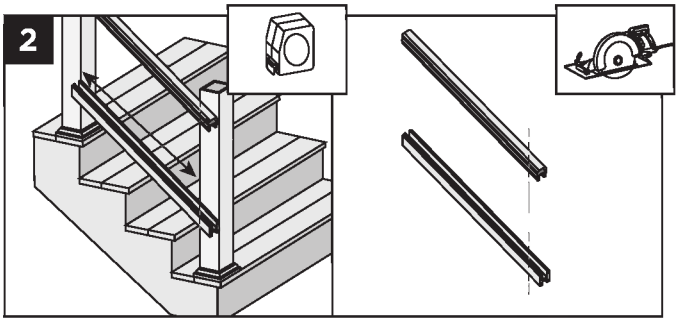

2. Set railing along the nose of the stair treads and mark line at each intersection. Cut rails on marks.

NOTE: *If using railing gaskets, subtract 1/16″ (0.15 cm) maximum, from each end and cut.*

Positioning RSBs on BOTTOM Post

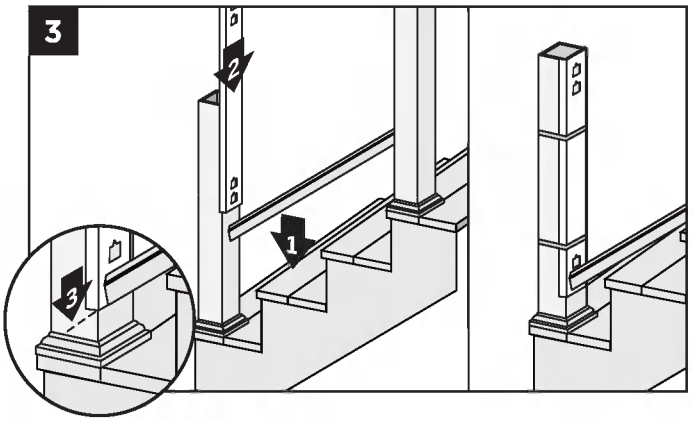

3. Position bottom rail between posts and slide TrexExpress™ Railing Assembly template into position with bottom rail outline on template aligned with end of bottom rail. Allow a minimum clearance of 1″ (2.5 cm) from stair tread. Secure template with rubber bands. Remove rail.

Attaching RSBs to BOTTOM Post

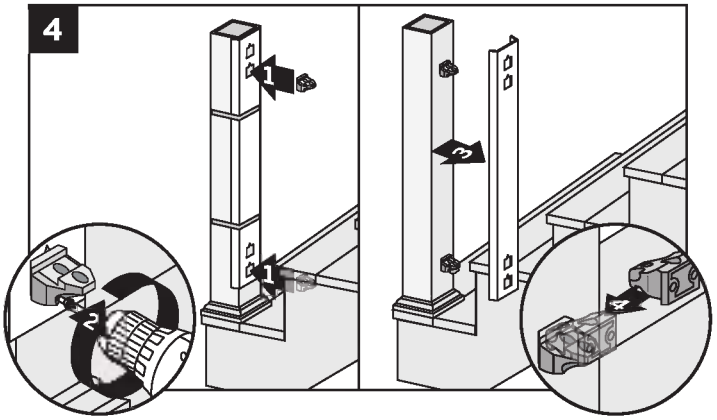

4. Attach upper and lower RSBs to bottom post, **flat side UP**, with wood screws provided. Remove template and place a second RSB, turned upside down, and interlock on each bracket.

HOW TO INSTALL CROWN, UNIVERSAL, AND BEVELED STAIR RAILING/CONTINUED
TREX TRANSCEND®

Positioning RSBs on UPPER Post

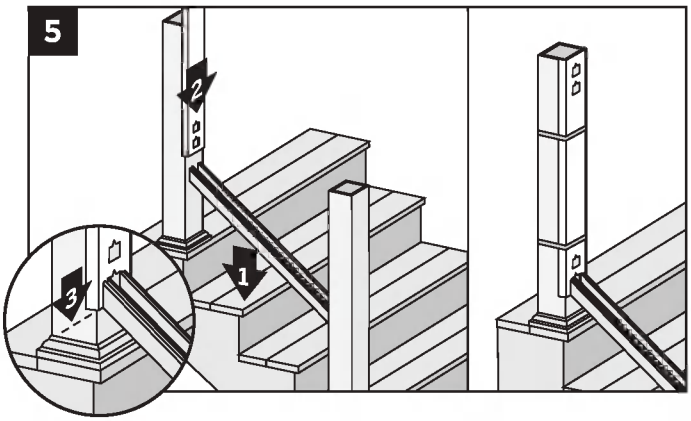

5. Position pre-cut bottom rail between posts. Slide TrexExpress™ Railing Assembly template into position, aligning bottom rail outline on template with end of bottom rail. Use rubber bands to hold template in place. Remove rail.

Attaching RSBs on UPPER Posts

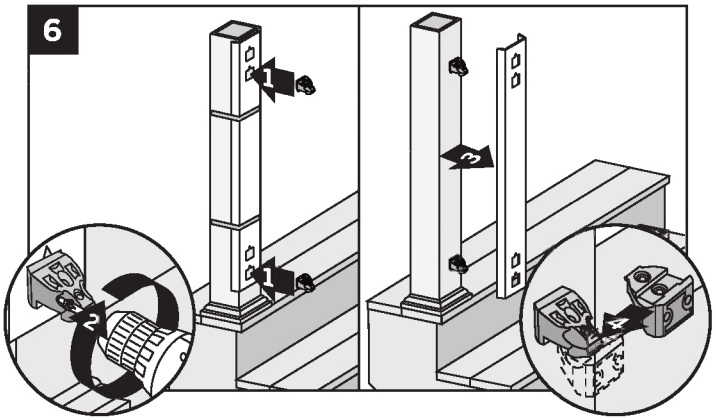

6. Attach upper and lower RSBs to top post, **flat side DOWN**. Remove template. Take second RSB, turn upside down and interlock into each bracket.

Complete Stair Rails Installation

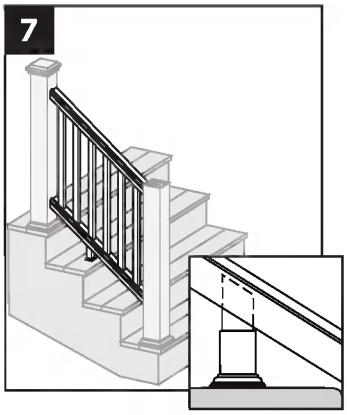

7. Install foot blocks prior to installing lower rail. *Refer to individual foot block instructions as well as "How to Install Universal and Beveled Railing Foot Blocks" on page 72*. For stair application, cut top section of foot block at an angle to match rail, pre-drill, and fasten.

   Install top and bottom railings, balusters, and baluster spacers according to previous instructions based on the style railing that is installed.

Crown and Beveled Stair Gasket Locations	Universal Rail Stair Gasket Locations
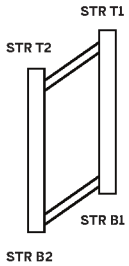	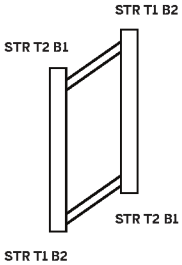

Attaching Optional Gaskets

8. Stair railing gaskets are designed to fit at slopes of 32° to 37°. Gaskets are labeled in order to ensure correct location.

Attaching Post Caps

9. Secure post caps with silicone or PVC adhesive.

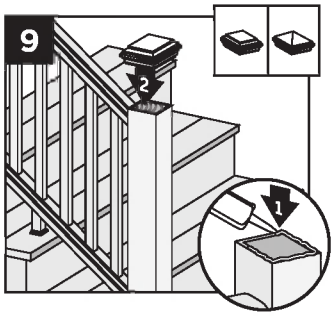

NOTE: *Clean-up any excess adhesive before drying.*

HOW TO INSTALL UNIVERSAL AND BEVELED RAILING FOOT BLOCKS
TREX TRANSCEND®

READ ALL IMPORTANT NOTES BELOW BEFORE REFERRING TO INDIVIDUAL FOOT BLOCK INSTRUCTIONS

IMPORTANT NOTES:

» ***BEVELED RAILING NOTES:***

- ***IF YOU HAVE A FOOTBLOCK WITH A DATE CODE OF ART-FTB-1108 ON THE INSTRUCTION SHEET (LOCATED ON BOTTOM RIGHT CORNER OF INSTRUCTIONS), THE FOOTBLOCK WILL NEED TO BE TRIMMED PRIOR TO ATTACHMENT TO BOTTOM RAIL. SEE STEPS 1A - 1C FOR DETAILS.***
- ***IF YOU HAVE A FOOTBLOCK WITH A DATE CODE OF TR-FTB-0912 ON THE INSTRUCTION SHEET, TRIMMING IS NOT REQUIRED.***

» ***Foot blocks must be placed before installing bottom rails.***

» ***One centered foot block is required for every section of railing or stairway section.***

Trimming Footblock for Beveled Railings Only

1a. Dismantle footblock into two sections – this can be done by fully extending the upper beam and continuing to pull this through which will separate the footblock into two sections.

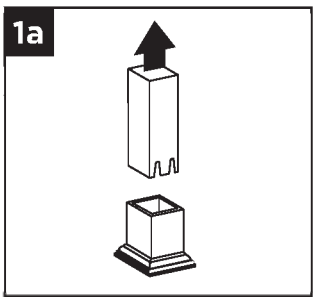

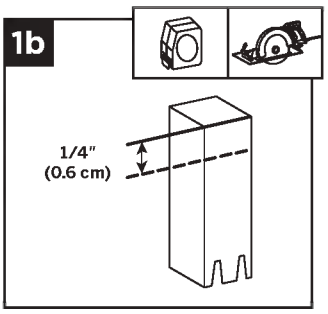

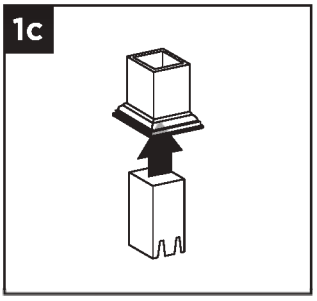

1b. Measure 1/4" (0.6 cm) at solid portion of upper beam and cut here. **(DO NOT cut from bottom of the beam which shows the pre cut edges that mates to the base of the foot block.)**

1c. Re-assemble the footblock by pushing the upper beam through the underside of the base of the footblock and allowing this to catch/snap into position. **DO NOT** fully extend at this time.

TREX® SELECT™ RAILING

NOTES:

- ***All Trex Select Railing lengths are manufactured at ON CENTER dimensions (spanning from center of each post): 67-5/8" (176.8 cm) for 6' (1.83 m) on center, and 92-5/8" (235.3 cm) for 8' (2.44 m) on center. Note that railings are designed to be slightly longer that required to allow for very slight play in post placement – trimming may be required. IT IS VERY IMPORTANT TO MEASURE FIRST.***
- ***Trex Select Railings are designed to be installed OVER the decking frame or on inside of rim joist. Notching of pressure treated posts or posts installed on outside of rim joist are not allowed.***

PARTS

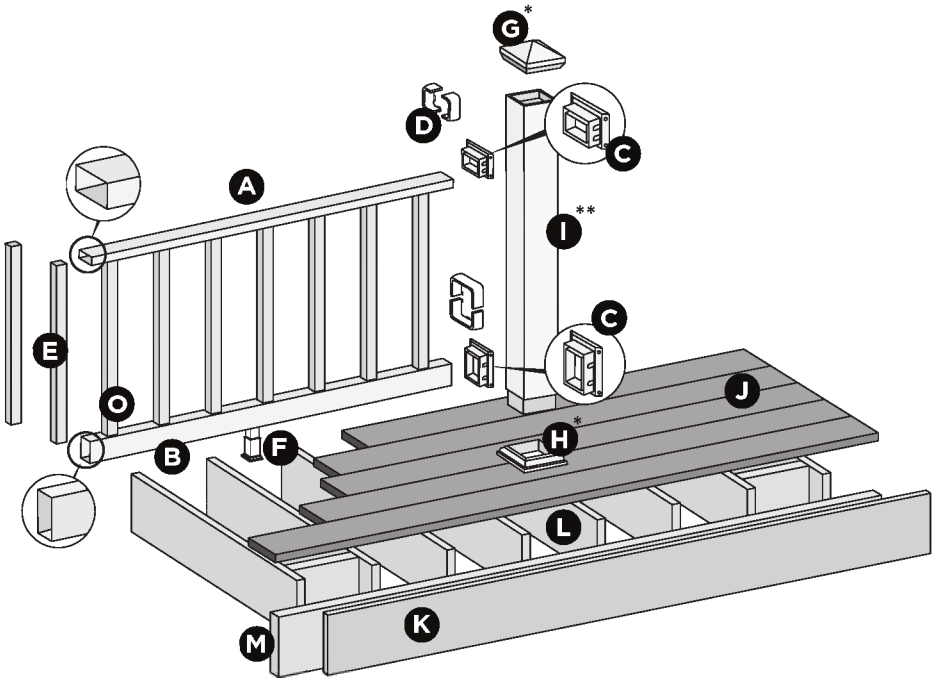

A. Select Top Rail
B. Select Bottom Rail
C. Select Brackets
D. Select Bracket Covers
E. Select Balusters
F. Adjustable Foot Block
G. Post sleeve cap*
H. Post sleeve skirt*
I. Post sleeve - 4" x 4" (10.2 cm x 10.2 cm) or 6" x 6" (15.2 cm x 15.2 cm) post sleeve)**
J. Trex decking
K. TrexTrim™ or Trex fascia
L. Code-approved wood joist - 2" x 8" (5.1 cm x 20.3 cm)
M. Code-approved wood rim joist - 2" x 8" (5.1 cm x 20.3 cm) or larger

DETERMINING BALUSTERS NEEDED		
Baluster Type	**Per 6' OC Section**	**Per 8' OC Section**
(Horizontal Application)	13	18
(Stair Application)	11	15

* *Item not included in the Select railing kits.*
** *Both 4" x 4" (10.2 cm x 10.2 cm) and 6" x 6" (15.2 cm x 15.2 cm) post sleeves are designed to fit over 4" x 4" pressure-treated post.*

NOTE: *If installing 42" (106.7 cm) railing, use longer posts sleeves and measure accordingly to ensure a proper cut (**DO NOT CUT POST SLEEVES TO ACTUAL 42" – THESE NEED TO BE LONGER TO ALLOW FOR POST CAPS TO FIT**).*

NOTE: *Pictorial representations shown may only show one style of railing, while others may also be used. Review detailed instructions to determine what railing styles and combinations can be used.*

HOW TO INSTALL TREX® SELECT™ RAILING
TREX SELECT™

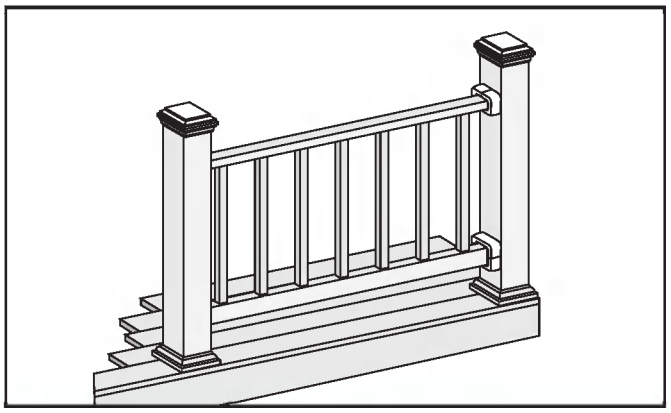

Read all instructions BEFORE installation.

Important: Post sleeves are **NOT** to be cut for this design style.

Installing Pressure-Treated Posts

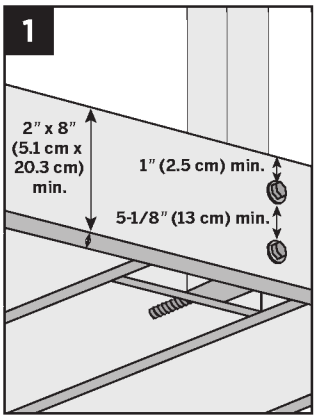

» **Posts are to be installed 6′ (1.83 m) or 8′ (2.44 m) on center to accommodate appropriate railing length.**
» Attach posts using 1/2″ (1.3 cm) carriage bolts.
» Minimum joist size is 2″ x 8″ (5.1 cm x 20.3 cm).
» Top bolts must be 1″ (2.5 cm) from tops of joists.
» Bottom bolts must be 5-1/8″ (13 cm) from top bolts.

NOTE: *Blocking* ***MUST*** *added for extra strength.*

Installing Post Sleeve Skirts and Post Sleeves

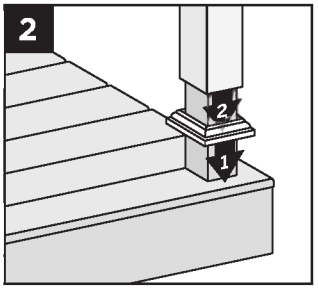

2. Slide post sleeve skirt over post and down to rest on decking surface. Slide post sleeve over post and position inside post sleeve skirt.

NOTE: *Shims can be used to plumb post sleeves.*

Cutting Railings

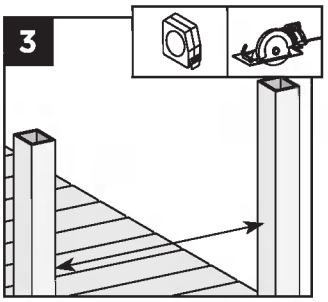

3. Measure between posts and cut rails to same length. When measuring, cut equal lengths from each side of railing allowing a minimum of 1-5/16″ (3.3 cm) on each end. This will ensure proper baluster and bracket placement and equal spacing of balusters per each railing section. To allow for bracket attachment on each end of the railing, cut an additional 1/4″ (0.6 cm) max. from each end of railing.

Attaching Foot Block to Bottom Railing

NOTE: REFER TO PAGES 79-80 FOR DETAILED INSTRUCTIONS ON INSTALLATION OF FOOT BLOCK (BASIC STEPS ARE SHOWN HERE).

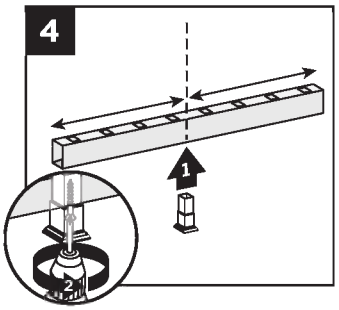

4. Invert the bottom railing. Center foot block on bottom rail and attach. **DO NOT** extend foot block.

Assembling Railing Section

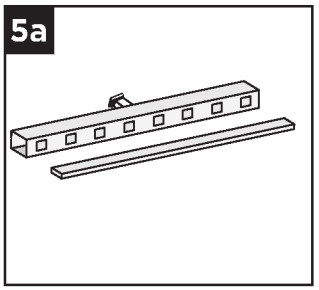

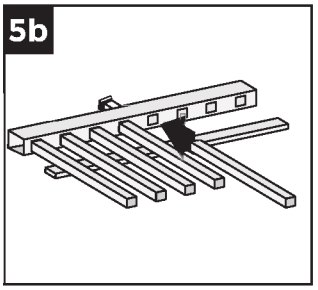

5a. On clean flat surface lay bottom railing on its side. Make sure to allow enough room for installation of balusters and top rail. Place a scrap piece of 1″ (2.5 cm) decking board running parallel to bottom rail for support when installing balusters.
5b. Insert balusters into bottom rail slots as far as they will go, allowing the balusters to also rest on the decking board.

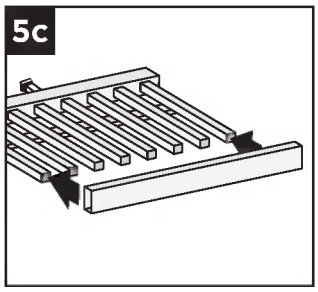

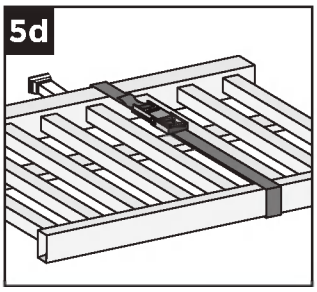

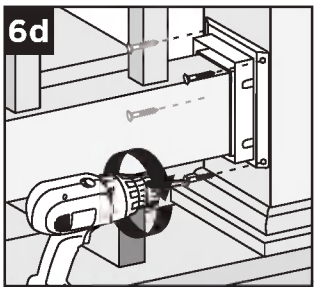

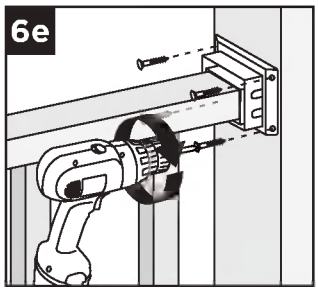

5c. Attach top rail to balusters, feeding each baluster into required slots. Start on one end and work towards the other.
5d. To help temporarily secure the railing section together, place a ratchet strap around the top and bottom rail and tighten until snug. **DO NOT OVERTIGHTEN AS YOU CAN BEND THE RAILING.**

Installing Railing Section to Posts

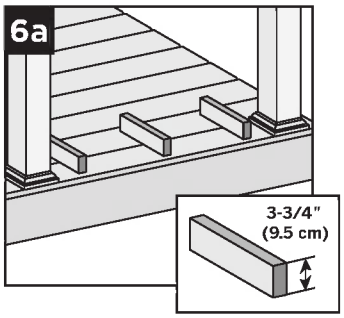

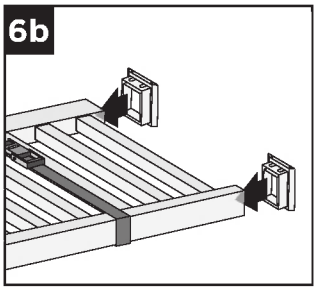

6a. Using scrap material (i.e. 2 x 4s, decking boards, etc.) cut at least three support blocks at 3-3/4" (9.5 cm) in height. Place one each on decking surface beside each post and one near center of span.
6b. Slide brackets on each end of both top and bottom railing.

6c. Lift secured railing section up, and **CENTER** this section in between the spanned posts on pre-positioned support blocks.

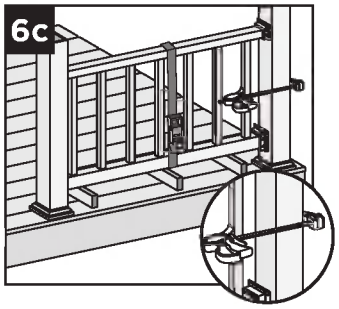

NOTE: *To help stabilize railing section use a quick-grip clamp (or other type of clamp) and clamp the first baluster to post sleeve. (DO NOT OVERTIGHTEN CLAMP.)*

6d. Install bottom bracket (both sides) to post using four #8-10 x 2" (5.1 cm) screws per bracket *(provided)*.
6e. Install top bracket (both sides) to post using four #8-10 x 2" (5.1 cm) screws per bracket *(provided)*.

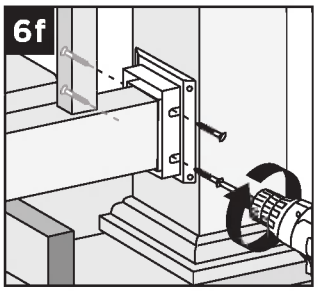

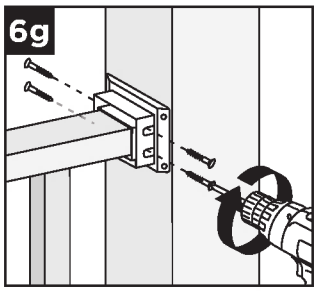

6f. Install bottom bracket (both sides) to railing using four #10 x 1" screws per bracket *(provided)*.
6g. Install top bracket (both sides) to railing using four #10 x 1" screws per bracket *(provided)*.

Attaching Bracket Covers and Post Caps

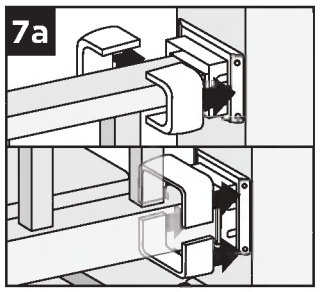

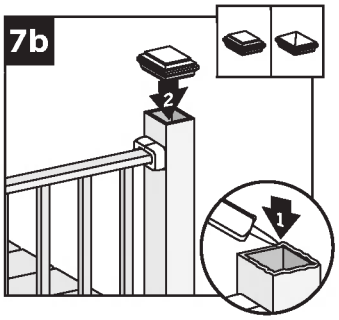

7a. Snap bracket covers over each bracket.
7b. Secure post caps with silicone or PVC adhesive.

NOTE: *Clean-up any excess adhesive before drying.*

HOW TO INSTALL TREX® SELECT™ STAIR RAILING
TREX SELECT™

Read all instructions BEFORE installation.

NOTE: *All Select railings work* ***ONLY WITH STAIR SLOPES OF 32°-37°****.*

Installing Posts, Post Sleeve Skirts, and Post Sleeves for Stair Rails

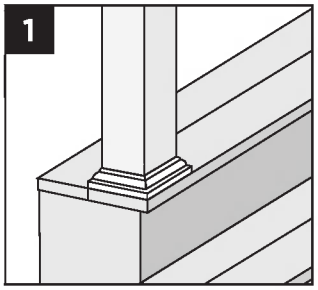

1. Install posts, post sleeve skirts, and post sleeves according to standard Select railing instructions.
   - » In most cases, a post and post sleeve longer than 39″ (99.1 cm) will be needed on the lower section of stair rail to accommodate stair angle.
   - » Make sure top and bottom posts for stairs are installed at nose of each tread.

Measuring and Cutting Railings

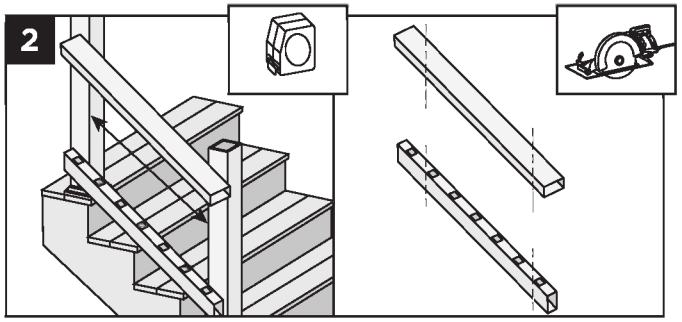

2. Set railing along the nose of the stair treads, **making sure baluster holes are vertically aligned** and mark line at each intersection. When measuring, cut equal lengths from each side of railing allowing a minimum of 1-5/16″ (3.3 cm) on each end. This will ensure proper baluster and bracket placement and equal spacing of balusters per each railing section. To allow for bracket attachment on each end of the railing, also cut an additional 1/4″ (0.6 cm) max. from each end of railing.

Cutting Balusters on Angle (OPTIONAL)

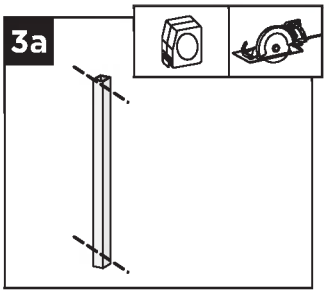

3a. In order for balusters to seat properly (depending on the angle of the stair railing), the balusters may need to be trimmed to match the angle of the bottom and top railing.

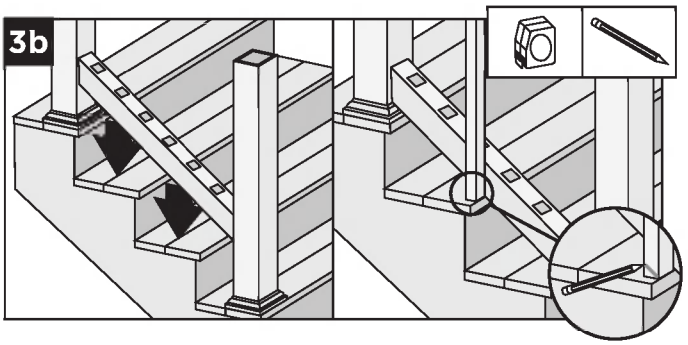

3b. Set bottom railing on nose of stair treads and set baluster at 90 degrees on the outside of the railing, mark and measure the angle.

NOTE: *Measure, mark and cut a scrap board to ensure you have proper angle* ***BEFORE*** *cutting balusters on angle.*

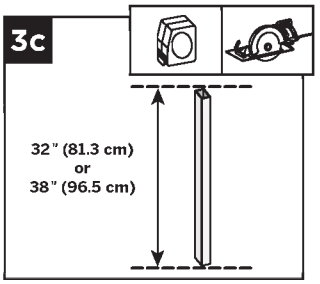

3c. Cut the **VERY END** of baluster, both top and bottom, making sure that point to point measurement of the baluster remains at either 32" (81.3 cm) (for 36" rail heights) or 38" (96.5 cm) (for 42" rail heights).

Attaching Footblock to Bottom Railing

» **REFER TO PAGE 80 FOR DETAILED INSTRUCTIONS ON INSTALLATION OF FOOT BLOCK (BASIC STEPS ARE SHOWN BELOW).**

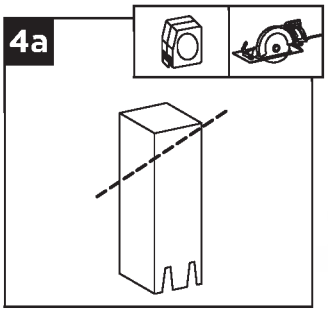

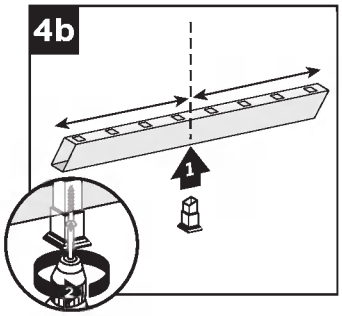

4a. For stair applications, cut the section of foot block at an angle to match rail. Refer to foot block instructions for specific information on how to do this.

4b. Invert bottom rail. Center foot block on bottom rail and attach. **DO NOT** extend foot block.

Attachment of Bottom Rail to Post

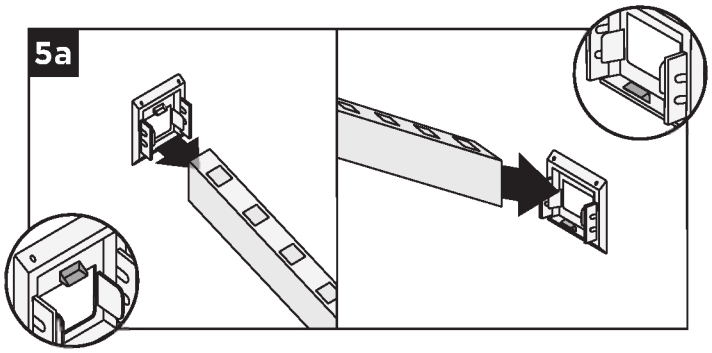

5a. Slide bottom stair brackets on bottom rail on each side. Top bracket must have tab on bracket facing up. Bottom bracket must have tab facing down.

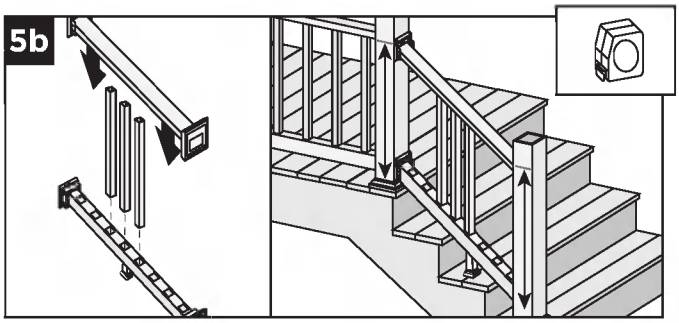

5b. Assemble a few of the balusters into the bottom and top railings (make sure balusters are setting at 90 degrees) and set this on scrap material clearing the stair treads to determine where bracket locations need to be. Measure to make sure that bottom railing will clear the stair treads as well as top railing will be aligned with horizontal railing **(remember in most cases, a post and post sleeve longer than 39" (99.1 cm) will be needed on the lower section of stair rail to accommodate stair angle)**.

5c. After locating appropriate position for bottom rail remove top rail and balusters and attach bottom stair bracket (both sides) to post using four #8-10 x 2" (5.1 cm) screws per bracket *(provided)*.

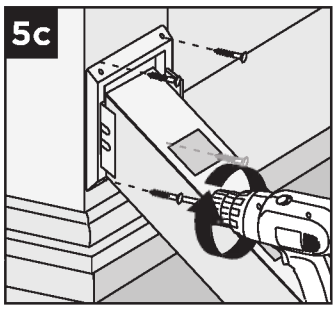

Install Balusters

6. Slide balusters into bottom rail.

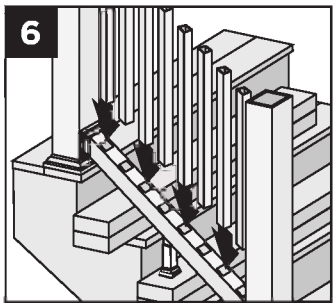

Attachment of Top Rail to Post

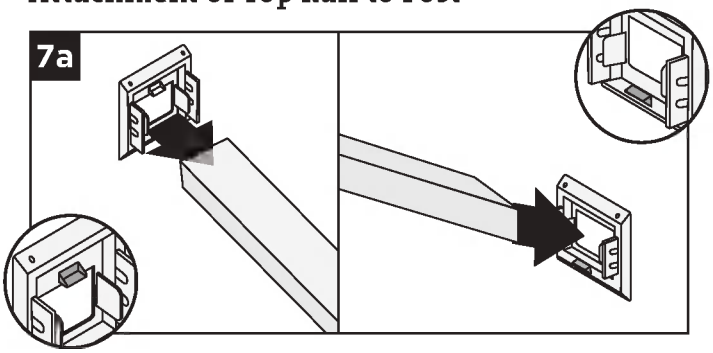

7a. Slide top stair brackets on top rail on each side. Top bracket must have tab on bracket facing up. Bottom bracket must have tab facing down.

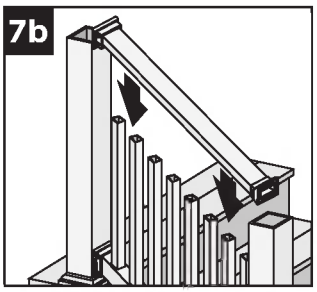

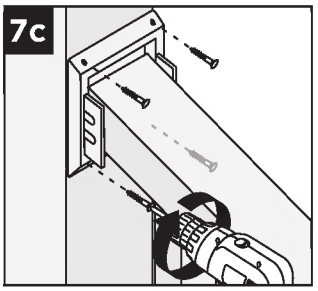

7b. Place top rail onto balusters, allowing the top rail to rest on the surface of the balusters.
7c. Attach top stair bracket (both sides) to post using four #8-10 x 2" (5.1 cm)screws per bracket *(provided)*.

Attachment of Bottom and Top Brackets to Rails

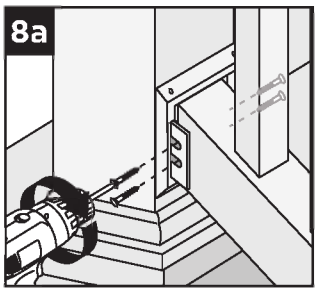

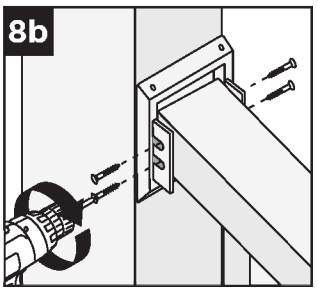

8a. Install bottom stair bracket (both sides) to railing using four #10 x 1" screws per bracket *(provided)*.
8b. Install top stair bracket (both sides) to railing using four #10 x 1" screws per bracket *(provided)*.

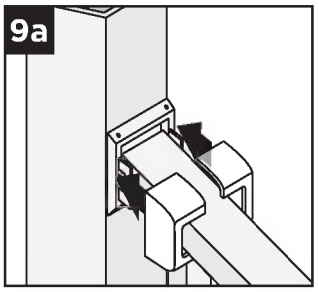

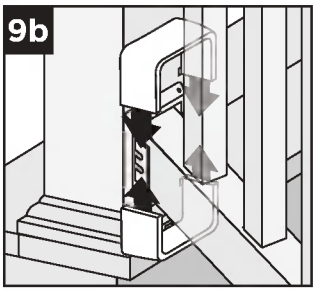

Attaching Bracket Covers and Post Caps

9a. Snap bracket covers over top rail bracket.
9b. Snap bracket covers over bottom rail bracket.

9c. Secure post caps with silicone or PVC adhesive.

NOTE: *Clean-up any excess adhesive before drying.*

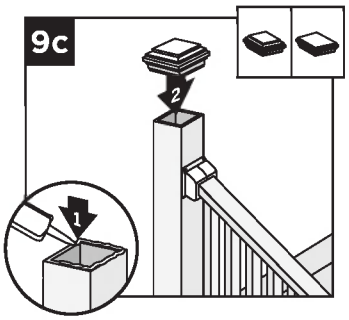

HOW TO INSTALL TREX® SELECT™ RAILING FOOT BLOCKS
TREX SELECT™

Read all instructions BEFORE installation.

> ***NOTE:*** *Foot blocks must be placed before installing bottom rails.*
>
> ***NOTE:*** *One centered foot block is required for every section of railing or stairway section.*

Attaching Foot Block to Bottom Rail

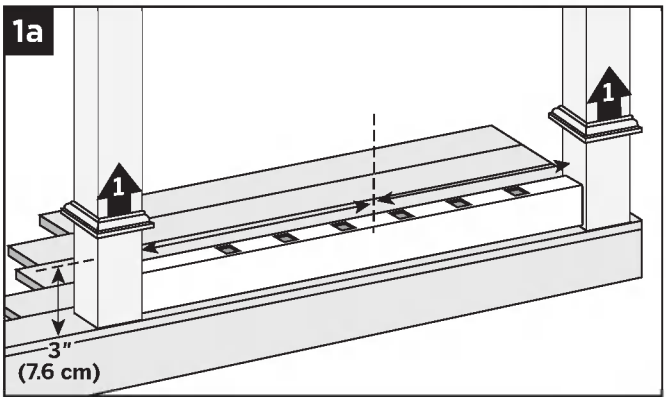

1a. Center and cut bottom rail to fit between post span, making sure to cut from both sides of bottom railing to allow for balusters to be equally spaced.

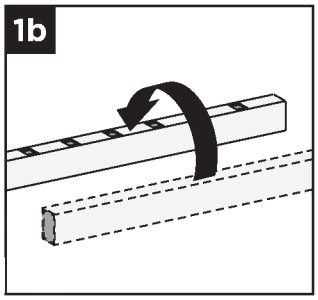

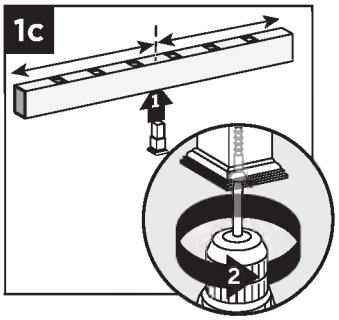

1b. Invert the Select bottom rail.
1c. Center foot block on Select bottom rail. Drill 1/16" (0.15 cm) pilot hole through center of rail, then attach foot block to rail using 2" (5.1cm) screw (*provided*). **DO NOT** extend foot block.

Drill Pilot Hole for Foot Block Base Plate

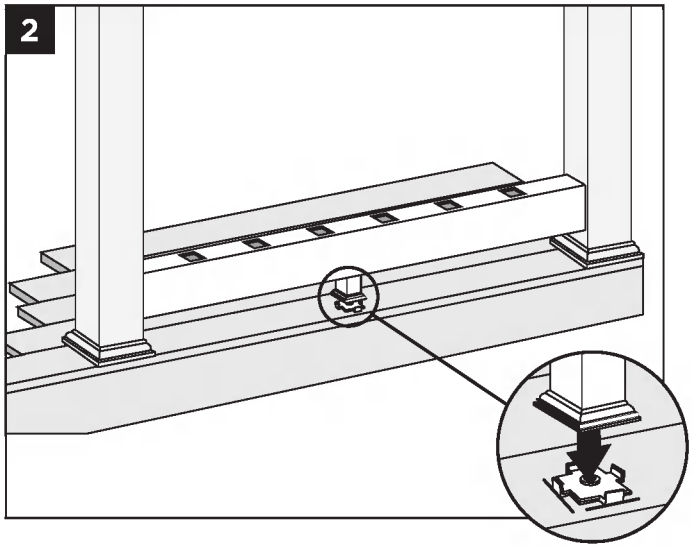

2. Center bottom railing with foot block attached (**DO NOT EXTEND FOOT BLOCK**) in between post span. Place base place directly under location of foot block placement and mark accordingly.

Installing Foot Block Base Plate

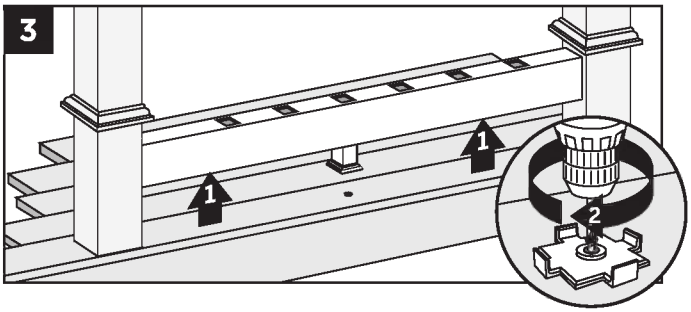

3. Remove rail. Position foot block base plate at marked locations and drill a 1/16" (0.15cm) pilot hole into deck board. **SECURE** foot block base plate with #10 x 3/4" (1.9 cm) stainless steel screws *(provided)*.

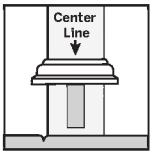

Installing Select Railing Section

4. Install Select horizontal railing section as *per instructions* provided with Select Railing.

HOW TO INSTALL TREX® SELECT™ RAILING FOOT BLOCKS/CONTINUED
TREX SELECT™

Extending and Securing Foot Block

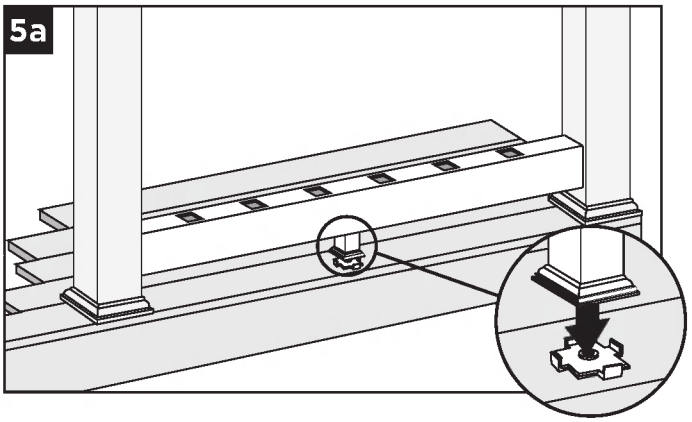

5a. Extend foot block to seat on foot block base plate.

5b. With foot block fully seated on base plate, secure with two 3/4" (1.9 cm) retaining screws *(provided)*. Install one on each side of foot block 1-1/2" (3.8 cm) from bottom of base. Push in screw plugs/covers.

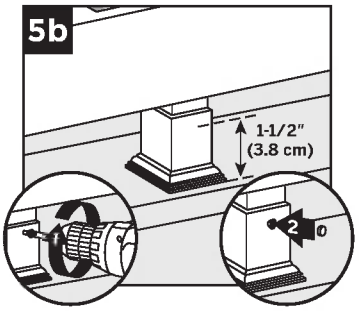

NOTE: *For better ease of attachment, predrilling is recommended using 7/64" (max) drill bit to help avoid possible splitting of the footblock.*

HOW TO INSTALL TREX® SELECT™ FOOT BLOCK FOR STAIR RAILING

Cutting Foot Block

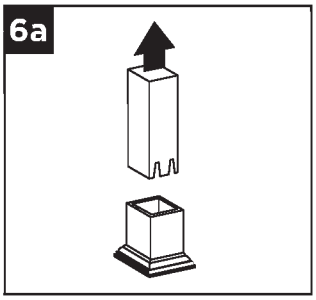

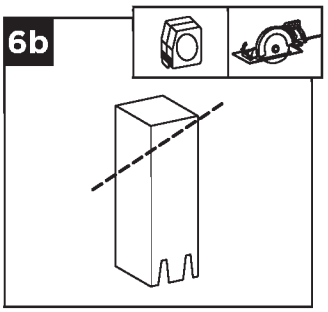

6a. Dismantle foot block into two sections – this can be done by fully extending the upper beam and continuing to pull this through which will separate the foot block into two sections.

6b. For stair applications, cut top section of foot block at an angle to match rail.

6c. Re-assemble the foot block by pushing the upper beam through the underside of the base of the foot block and allowing this to catch/snap into position. **DO NOT** fully extend at this time.

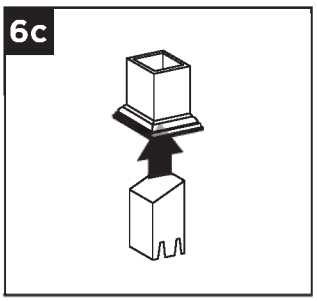

Attaching Foot Block to Bottom Stair Rail

7. Invert bottom stair rail. Center foot block on bottom rail and attach. **DO NOT** extend foot block.

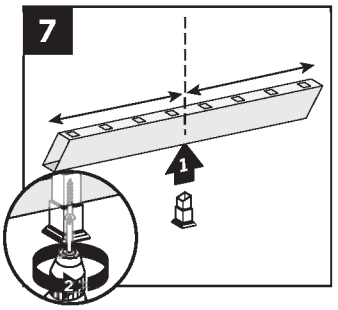

Complete Stair Rails Installation

8a. Install foot blocks prior to installing lower rail as *per previous Select railing foot block instructions.* For stair application, cut top section of foot block at an angle to match rail.

8b. Install Select stair railing section as *per instructions* provided with Select Railing.

8c. Extend and fasten as *per previous instructions*.

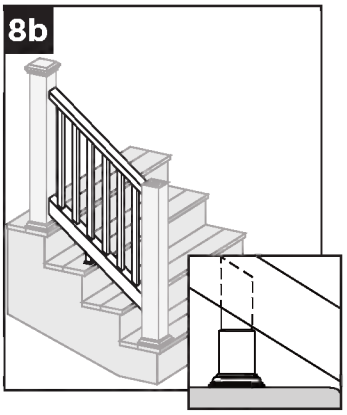

TREX DESIGNER SERIES RAILING®

Trex Designer Series Railing® Parts

A. Top rail
B. Bottom rail
C. Railing support brackets (RSBs)
D. Balusters*
E. Post sleeve*
F. Post sleeve cap*
G. Post sleeve skirt*
H. TrexExpress™ Designer Series Railing Assembly Tool*

** Item not included in Designer Railing Kit*

NOTE:

» *Architectural baluster cannot be used with Designer Series Railing.*

» *Trex Designer Railings are designed to be installed OVER the decking frame or on inside of rim joist. Notching of pressure treated posts or posts installed on outside of rim joist are not allowed.*

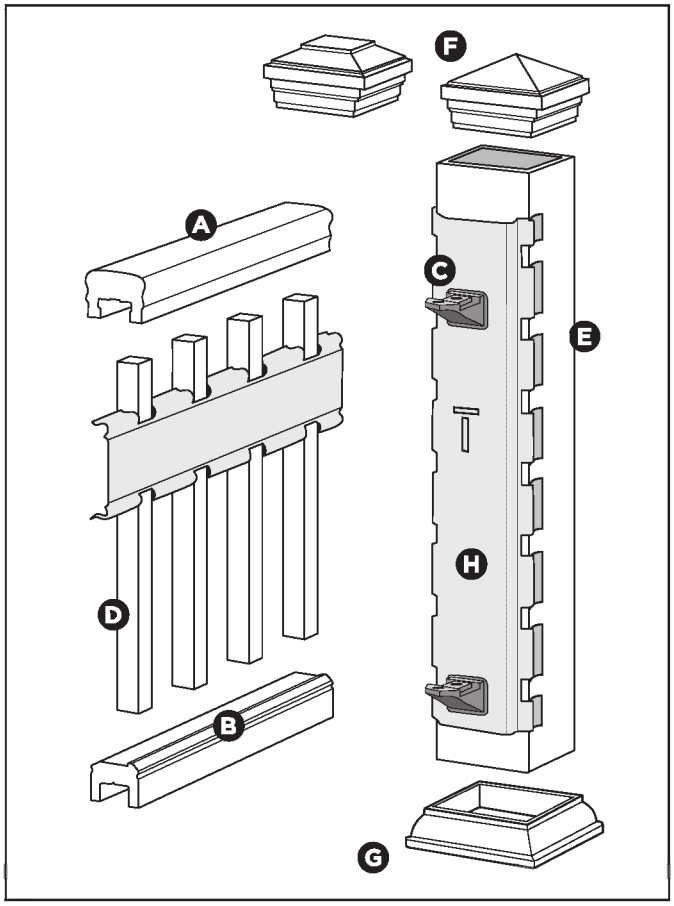

NOTE: *Position of bottom rail lip is not a structural component. It is recommended that it be consistently installed either inside or outside.*

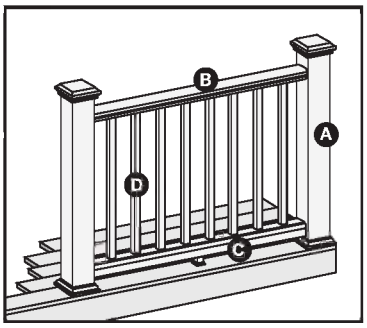

Standard

Cutting post sleeves is **NOT** required.

A. Pressure-treated post or Trex Post Mounts with Trex post sleeve
B. Top rail
C. Bottom rail
D. Trex Designer standard balusters

See page 82 for "How to Install Standard Railing".

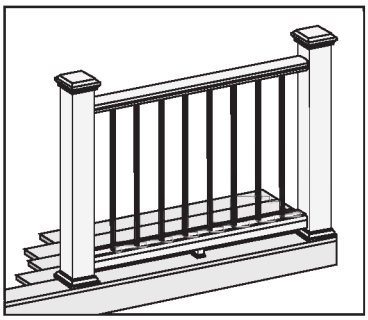

Contemporary

Cutting post sleeves is **NOT** required. Follow instructions for standard Designer installation, using metal balusters for square balusters.

A. Pressure-treated post or Trex Post Mounts with Trex post sleeve
B. Top rail
C. Bottom rail
D. Trex Designer contemporary balusters

See page 85 for "How to Install Contemporary Railing".

DESIGNER COLORS: *See inside back cover for color palette.*

HOW TO INSTALL STANDARD RAILING
TREX DESIGNER SERIES

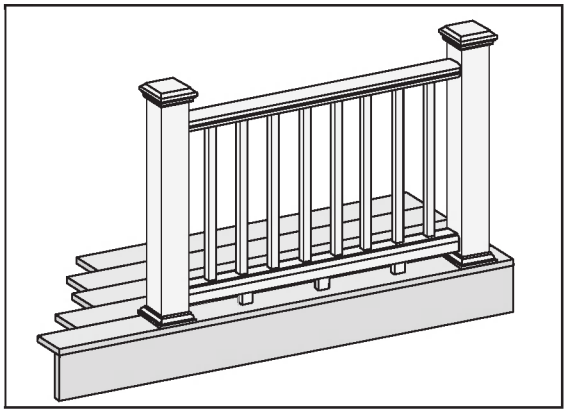

All Trex Designer Series Railing® uses the same application for attaching posts to the rim joists. Posts may be pressure-treated wood or a Trex Railpost™.

Read all instructions BEFORE installation.

Installing Posts

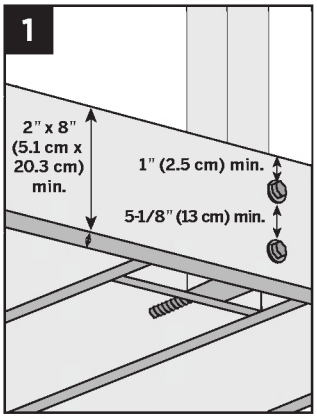

» Post span = maximum 6′ (1.83 m) on center.

» Attach post using 1/2″ (1.3 cm) carriage bolts.

» Minimum joist size is 2″ x 8″ (5.1 cm x 20.3 cm).

» Top bolt must be 1″ (2.5 cm) from top of joist.

» Bottom bolt must be 5-1/8″ (13 cm) from top bolt.

NOTES:
» *Blocking can be added for extra strength.*
» *Trex does not endorse notching any post when it is required to perform as a guardrail system.*

Installing Post Sleeve Skirts and Post Sleeves

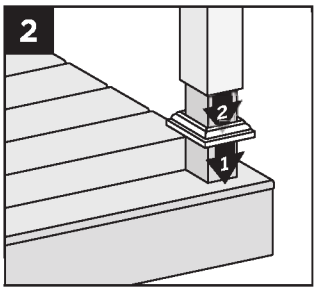

2. Slide post sleeve skirt over post and down to rest on decking surface. Slide post sleeve over post and position inside post sleeve skirt. **Cutting post sleeves is NOT required.**

Installing Railing Support Brackets (RSBs)

Option 1: Without TrexExpress™ Designer Series Railing Assembly Tool

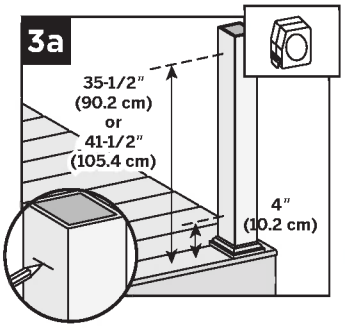

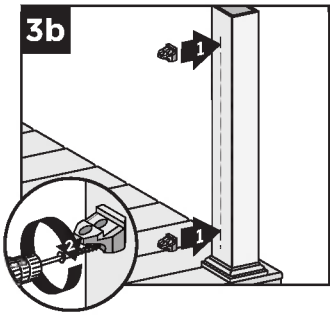

3a. For 36″ (91.4 cm) height, mark 4″ (10.2 cm) and 35-1/2″ (90.2 cm) from deck surface **OR** for 42″ (106.7 cm) height, mark 4″ (10.2 cm) and 41-1/2″ (105.4 cm) from the deck surface.
3b. Place RSBs on marks, center on posts and secure with 2″ (5.1 cm) wood screws (provided). Brackets should be aligned so top part of bracket aligns with mark.

NOTE: *Place both* ***top and bottom RSBs flat side UP.***

Option 2: With TrexExpress™ Designer Series Railing Assembly Tool

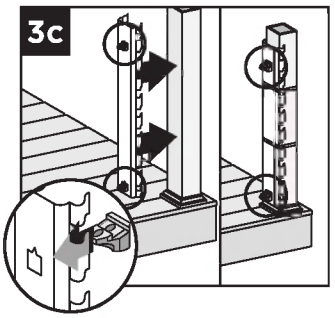

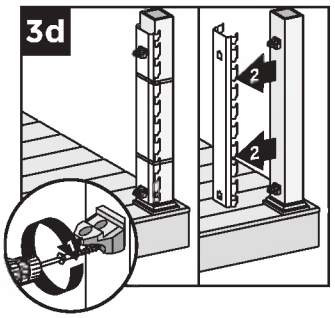

3c. Place RSBs in template. Place both **top and bottom RSBs flat side UP**. Secure template on post sleeve with tape or rubber band, with bottom of template resting on post sleeve skirt. If post sleeve skirts are not used, place 1-1/4″ (3.2 cm) shim under tool for proper bracket location.
3d. Secure RSBs with 2″ (5.1 cm) wood screws *(provided)* and remove template.

Measuring and Cutting Railings

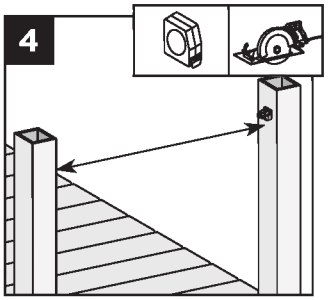

4. Measure and cut top and bottom rails to fit between posts. Leave 1/16″ (0.15 cm) gap at each end for cold weather expansion.

Assembling Rails with Balusters

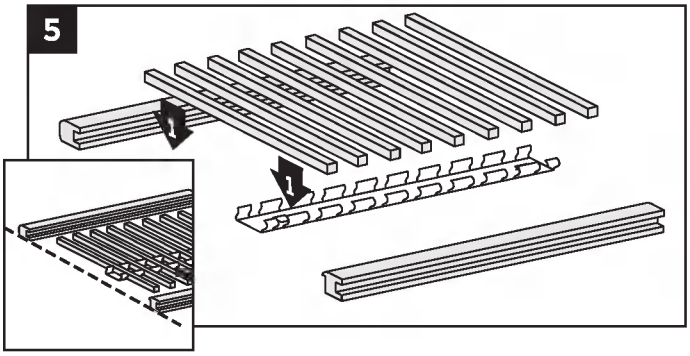

5. Place bottom rails on their sides, lip sides facing up. Using TrexExpress™ Designer Series Railing Assembly Tool, set balusters in designated slots.

NOTE: *Using two assembly tools and overlapping these will allow you to span the entire length of the railing section for a 6' (1.83 m) span.*

Insert balusters into top rail's channels, align bottom rails parallel to top rails with balusters at equal distance from both ends.

NOTE: *If assembly tool is not available, maximum spacing for balusters is 5" (12.7 cm) on center or 3-5/8" (9.2 cm) between balusters.*

Securing Balusters to Bottom Rail

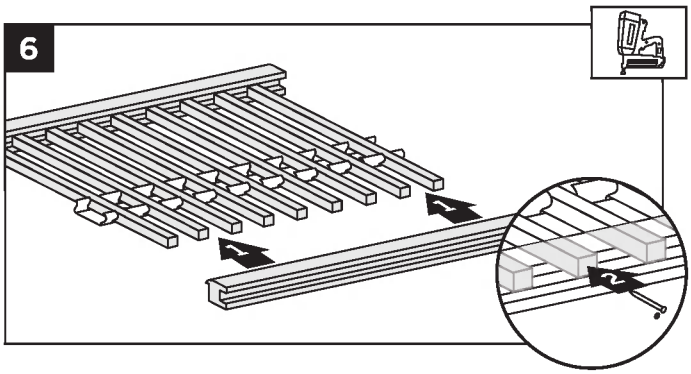

6. Move TrexExpress™ Designer Series Railing Assembly Tool to bottom rail and hold balusters in contact with rail lip. Secure balusters to bottom rail with 2" (5.1 cm) 16 gauge finishing nails through underside of bottom rail.

NOTE: *For added stability, drill pilot holes and use #8 - 2" (5.1 cm) screws to secure balusters.*

Securing Balusters to Top Rail

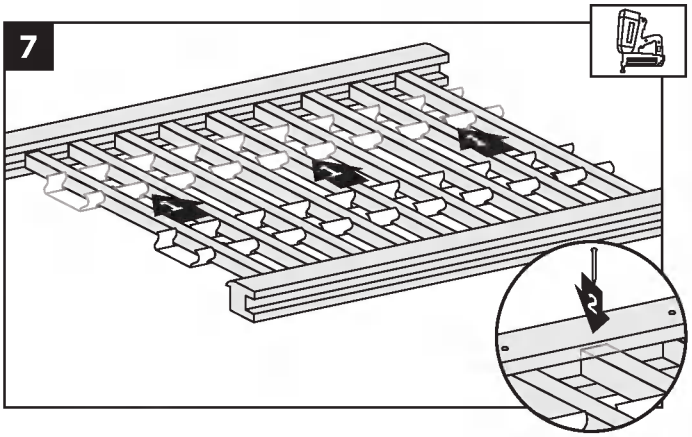

7. Slide TrexExpress™ Designer Series Railing Assembly Tool to top rail and check alignment of balusters. Secure balusters with 2" (5.1 cm) 16 gauge finishing nails through side of rail.

NOTE: *For added stability, drill pilot holes and use #8 - 2" (5.1 cm) screws to secure balusters or nail thru both sides of the top rail.* ***ALWAYS*** *hold nail gun perpendicular to baluster to be sure the nail drives securely into baluster.*

Attaching Foot Blocks

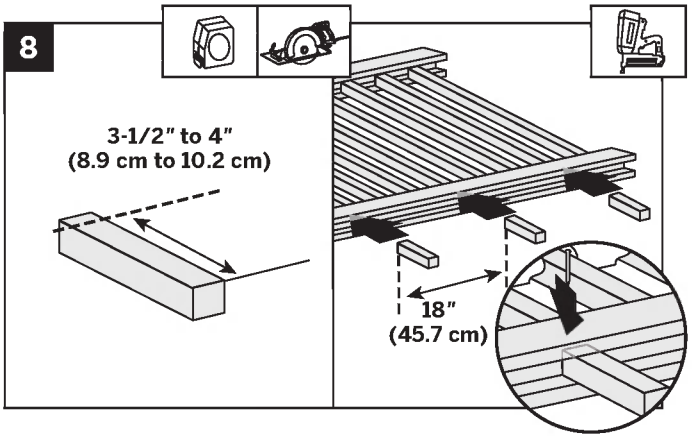

8. Measure distance from deck surface to top of channel in bottom rail, approximately 3-1/2" - 4" (8.9 cm - 10.2 cm). Secure foot blocks with 2" (5.1 cm) 16 gauge finishing nails through side of bottom rail.

NOTE: *2" (5.1 cm) screws can also be used. Pre-drilling would be required.*

NOTE: *Foot blocks are required every 18" (45.7 cm) for Designer Series Railing.*

Securing Railings to Posts

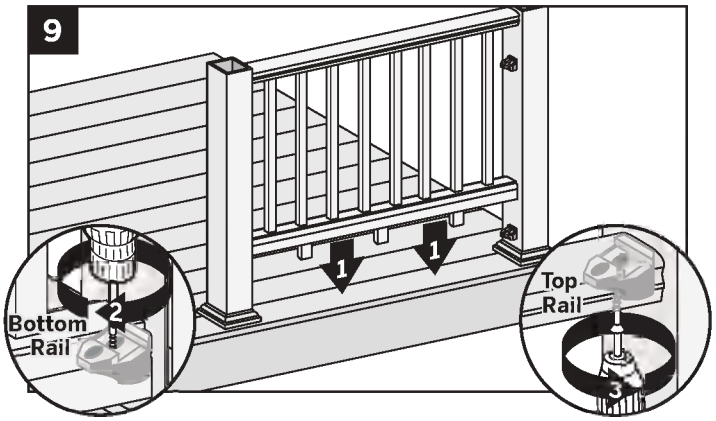

9. Place assembled railing section on RSBs on posts and secure top rail with two 1-1/2″ (3.8 cm) screws.

   Secure bottom rail with screws through top of rail and into the outermost hole in RSBs.

   Bottom rail can also be secured to posts with 16 gauge finishing nails, toenailed from bottom of rail and 1″ (2.5 cm) in from the posts.

Finishing Post

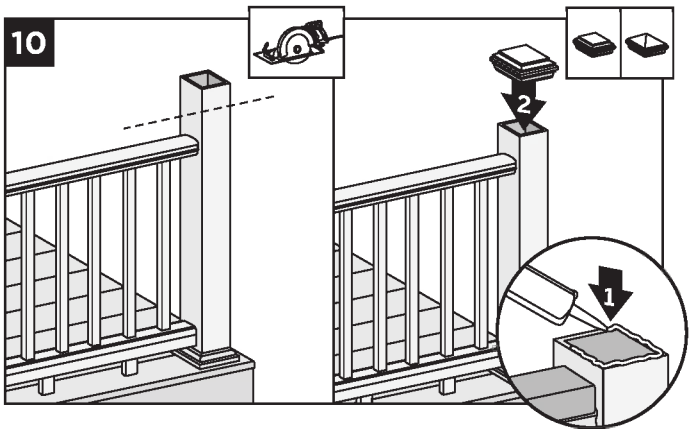

10. Posts and post sleeves can be trimmed but this is not a requirement. Make sure tops of posts are level. Secure post caps with construction-grade adhesive. Clean-up any excess adhesive before drying.

HOW TO INSTALL CONTEMPORARY RAILING
TREX DESIGNER SERIES

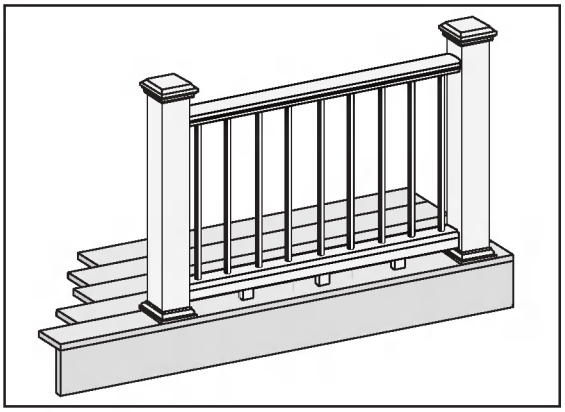

1. **Installing Posts**
   See instructions on page 82.

2. **Installing Post Sleeve Skirts and Post Sleeves**
   See instructions on page 82.

3. **Installing Railing Support Brackets (RSBs)**
   See instructions on page 82.

4. **Measuring and Cutting Railings**
   See instructions on page 82.

Attaching Foot Blocks

NOTE: *Foot blocks should be secured to bottom rail before attaching bottom rail to posts.*

Option 1: If using Contemporary Balusters for Foot Blocks

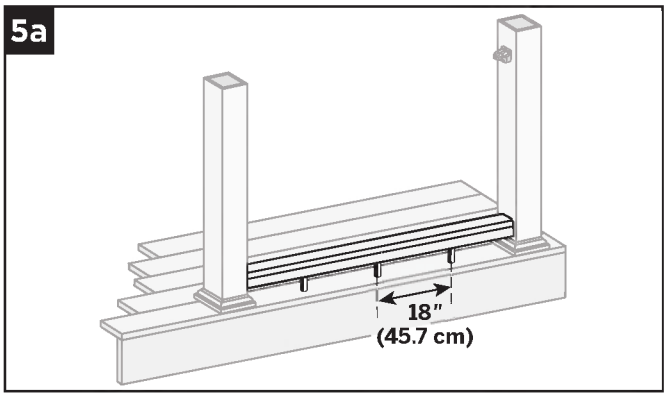

5a. Measure and cut round balusters for foot blocks every 18" (45.7 cm). Secure baluster connectors to bottom rails and deck for mounting balusters.

Option 2: If using Designer Balusters for Foot Blocks

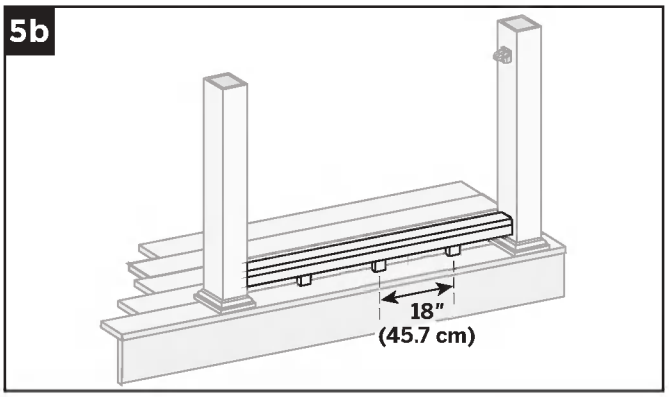

5b. Measure and cut square balusters for foot blocks every 18" (45.7 cm). Secure foot blocks with 2" (5.1 cm) 16 gauge finishing nails through side of bottom rail.

NOTE: *2" (5.1 cm) screws can also be used. Pre-drilling would be required.*

Installing Bottom Rail

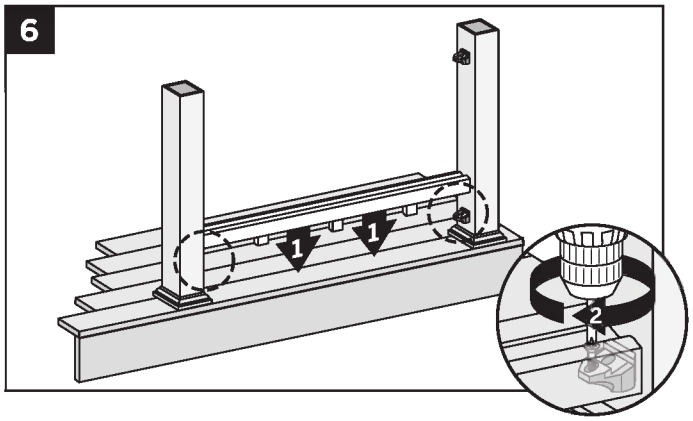

6. Secure bottom rail with screws through top of rail and into the outermost hole in RSBs.

   Bottom rail can also be secured to posts with 16 gauge finishing nails, toenailed from bottom of rail and 1" (2.5 cm) in from the posts.

DETERMINING NUMBER OF BALUSTERS AND SPACING

Number of balusters needed
Length of rail _____" ÷ 4.5 = _____balusters

» If number is odd, balusters will be centered.
» If number is even, balusters will be offset 2-1/4" (5.7 cm) from center.

Installing Baluster Connectors

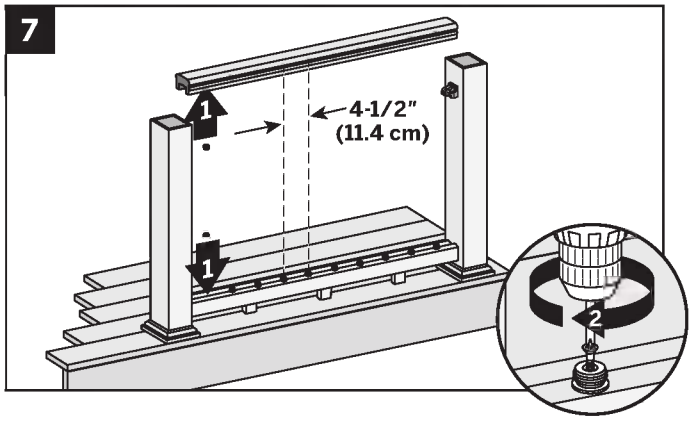

7. Place baluster connectors 4-1/2" (11.4 cm) on center and secure to top and bottom rails with screws.

Connecting Balusters to Bottom Rail

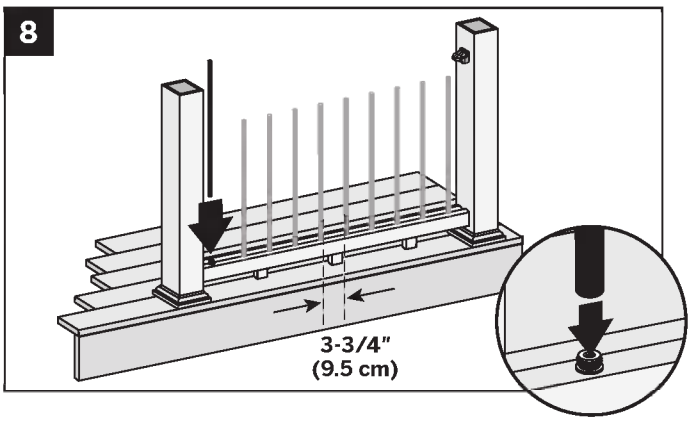

8. Lower each baluster down onto connectors on bottom rail.

Installing Top Rail

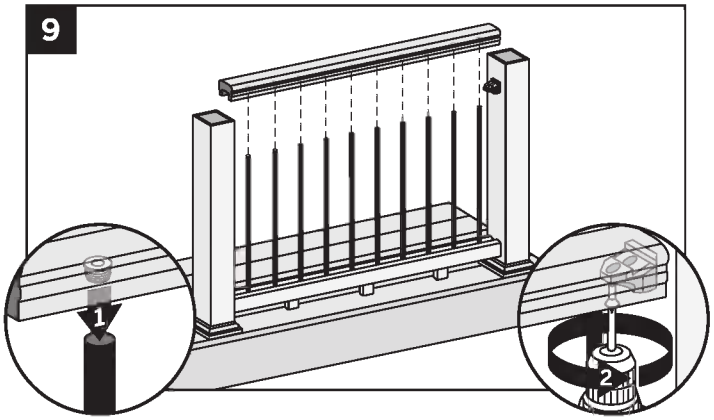

9. Lower top rail with connectors between posts onto RSBs and then secure balusters on connectors. Secure top rail with two 1-1/2" (3.8 cm) screws up through bottom of rail into RSBs.

Finishing Posts

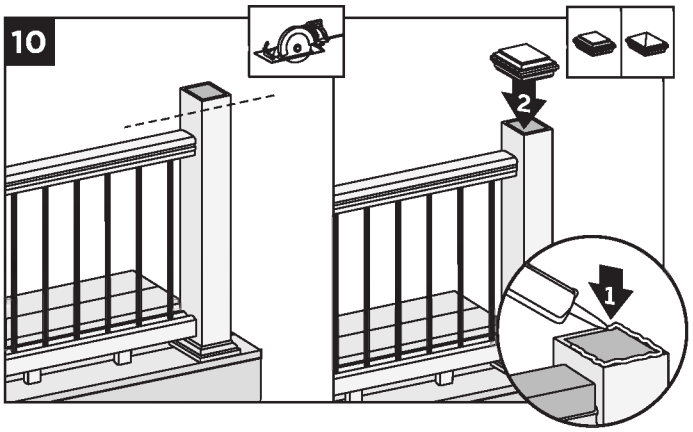

10. Posts and post sleeves can be trimmed but this is not a requirement. Make sure tops of posts are level. Secure post caps with construction-grade adhesive. Clean-up any excess adhesive before drying.

HOW TO INSTALL STANDARD STAIR RAILING
TREX DESIGNER SERIES

NOTE: *Trex rails meet major building codes for use as a guardrail system. Local municipalities may require a graspable handrail on stairways. Trex offers an ADA code-compliant handrail system. Check with your local building code officials for local requirements.*

Installing Posts for Stair Railing

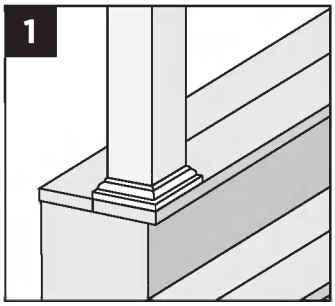

1. In most cases, a railpost or post sleeve longer than 39″ (99.1 cm) is required for the lower stair rail sections to accommodate stair angle. Both top and bottom posts need to be installed on outside corners (nose) of stair treads.

NOTE: *Posts, post sleeve skirts, and post sleeves are installed per standard Designer railing instructions.* *See page 82.*

Measuring and Cutting Railings

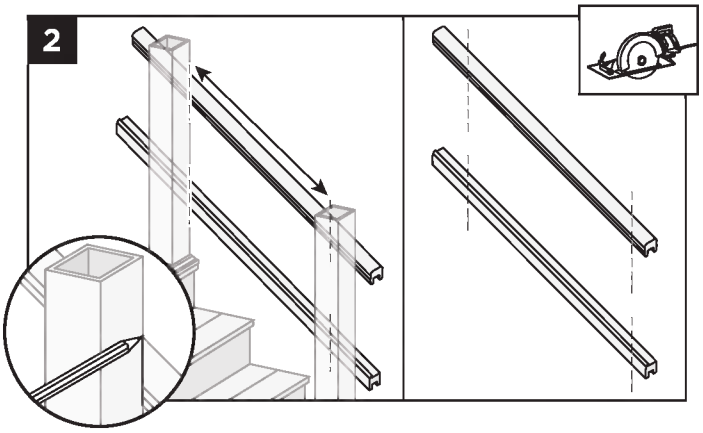

2. Determine length and angle of top and bottom rail. Set railings on the nose of the stair tread and mark line at each intersection.

   Cut rails on marks and place in position on supports. (Supports can be made from scrap material.)

NOTE: *Allow a minimum clearance of 1″ (2.5 cm) from stair treads.*

NOTE: *Check local building codes for railing height requirements.*

Installing Bottom RSBs on Upper and Lower Posts

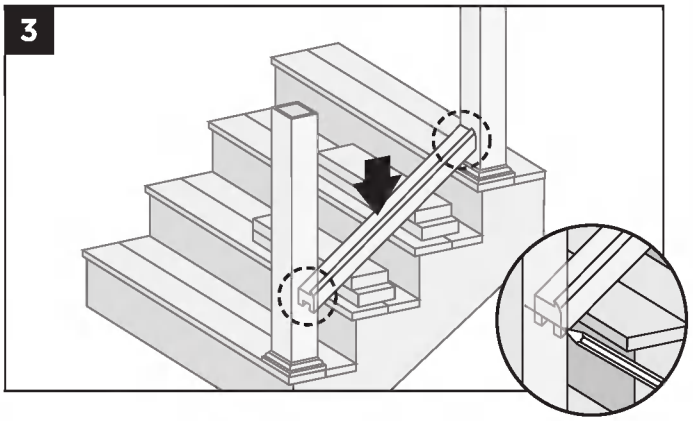

3. Position bottom rail between posts and set to proper height from stair tread. Support on blocks cut from scrap materials. Mark both posts where underside of the bottom rail intersects.

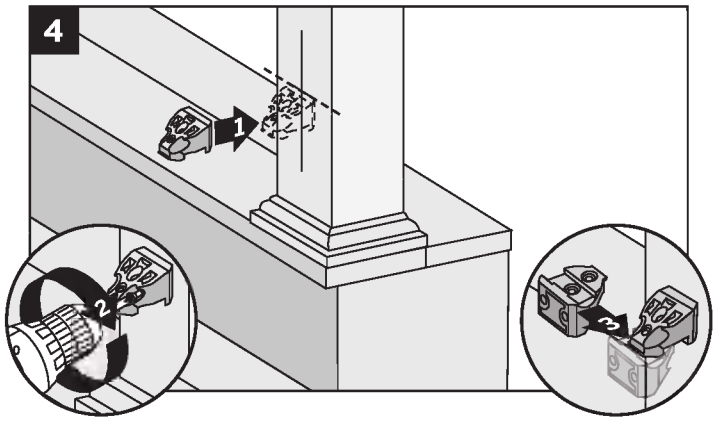

4. Position one RSB centered on upper post with top of bracket aligned with mark on post, **flat side DOWN**, and secure with two 2″ (5.1 cm) screws. Using a second RSB, turn upside down and interlock into bottom bracket on upper stair post.

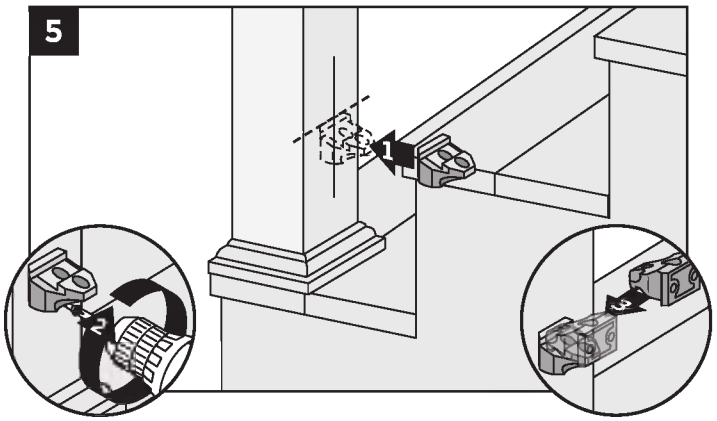

5. Position one RSB centered on lower post with top of bracket aligned with mark on post, **flat side UP**, and secure with two 2″ (5.1 cm) screws. Using a second RSB, turn upside down and interlock into bottom bracket on lower stair post.

Installing Top Rail RSBs on Upper and Lower Posts

6. Determine height of top rail from bottom rail and while holding top rail in place, and parallel to bottom rail, mark posts where underside of rail intersects.
7. Follow Steps 4-5 to install top rail RSBs on upper and lower posts.

Measuring and Cutting Balusters

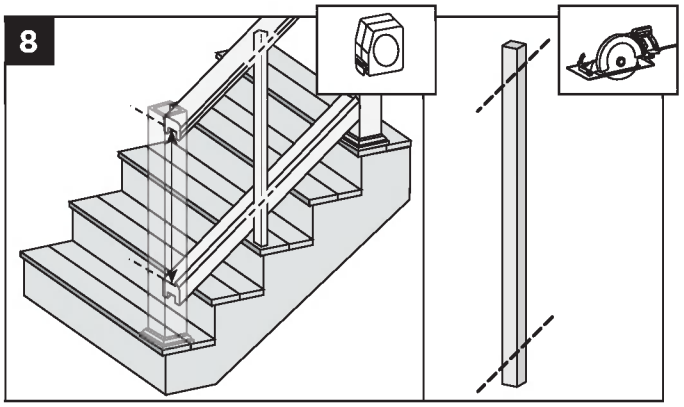

8. Measure and cut balusters to proper height and angle of stairs.

Assembling Rails with Baluster

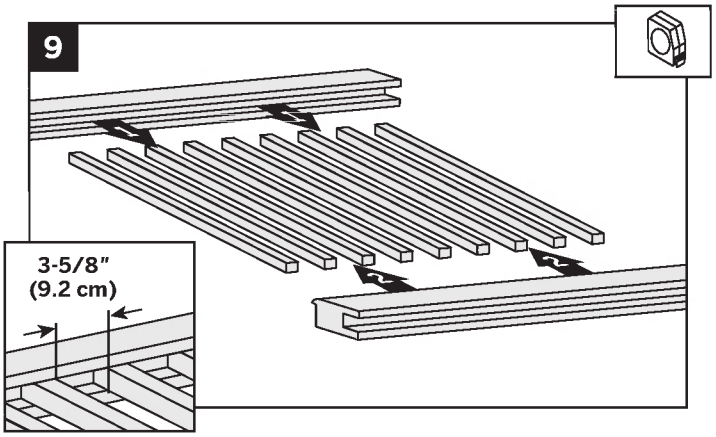

9. Insert and space balusters in top rails, then align bottom rails at parallel angle to top rails with balusters spaced the same and in contact with bottom rail lip.

NOTE: *Maximum spacing is 5" (12.7 cm) on center or 3-5/8" (9.2 cm) between balusters.*

Securing Balusters to Top and Bottom Rail

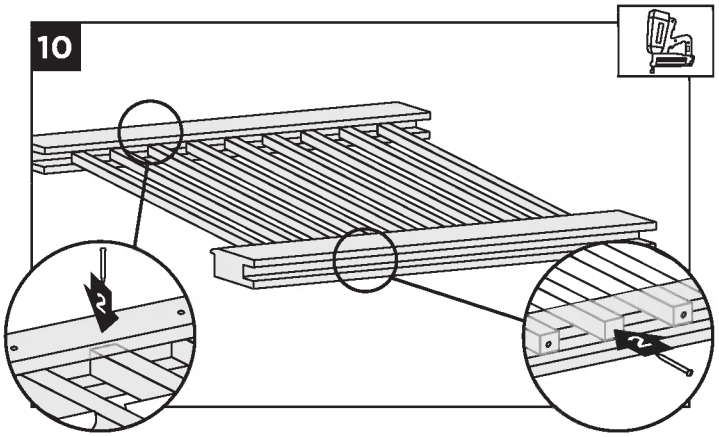

10. Secure balusters to top rail with 2" (5.1 cm) 16 gauge finishing nails through side of rail. Secure balusters to bottom rail with 2" (5.1 cm) finishing nails through underside of bottom rail.

Attaching Foot Blocks

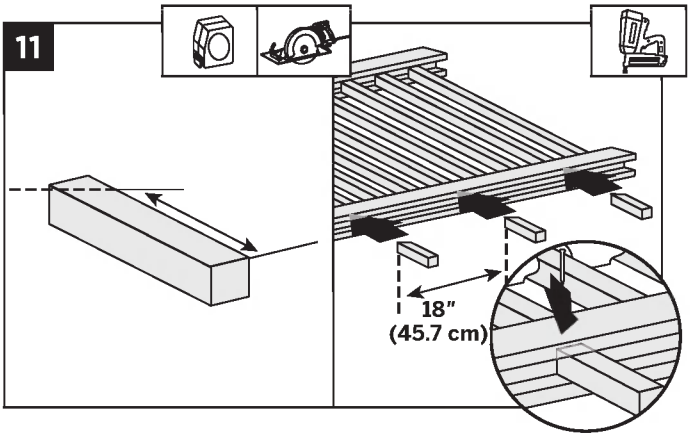

11. Measure and determine angle to cut foot blocks. Secure with 2" (5.1 cm) 16 gauge finishing nails through side of bottom rail.

NOTE: *2" (5.1 cm) screws can also be used. Pre-drilling would be required.*

NOTE: *Foot blocks are required every 18" (45.7 cm).*

HOW TO INSTALL STANDARD STAIR RAILING/CONTINUED
TREX DESIGNER SERIES

Mounting Rails on Posts

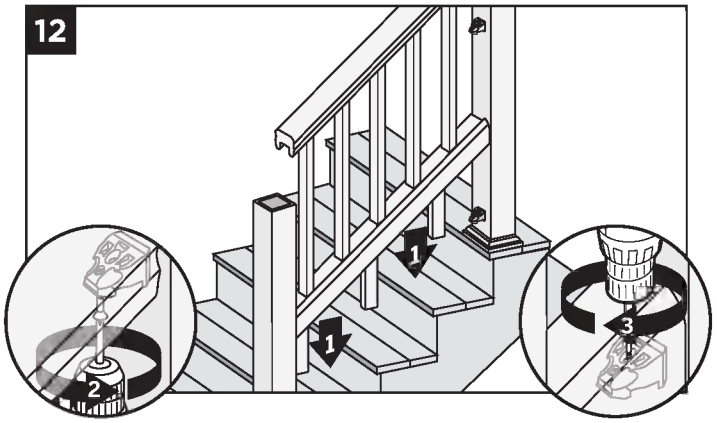

12. Place assembled railing section on RSBs on posts and secure top rail with two 1-1/2″ (3.8 cm) screws. Secure bottom rail with screws through outermost holes in RSBs.

Bottom rail can also be secured to posts with 16 gauge finishing nails, toenailed through the side of rail into the posts, 1-1/2″ (3.8 cm) from bottom of rail and 1″ (2.5 cm) from the post.

Finishing Posts

13. Posts and post sleeves can be trimmed but this is not a requirement. Make sure tops of posts are level. Secure post caps with construction-grade adhesive. Clean-up any excess adhesive before drying.

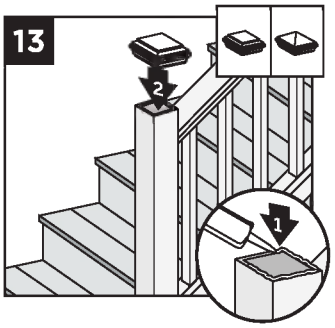

HOW TO INSTALL CONTEMPORARY STAIR RAILING
TREX DESIGNER SERIES

1. **Installing Posts for Stair Railing**
   See instructions on page 87.

2. **Measuring and Cutting Railings**
   See instructions on page 87.

3-5. **Installing Bottom RSBs on Upper and Lower Posts** *See instructions on page 87.*

6-7. **Installing Top RSBs on Upper and Lower Posts** *See instructions on page 88.*

Installing Foot Blocks

Option 1: If using Contemporary Balusters for Foot Blocks

8a. Measure and cut round balusters for foot blocks every 18″ (45.7 cm). Secure baluster connectors to bottom rail and stair treads for mounting balusters.

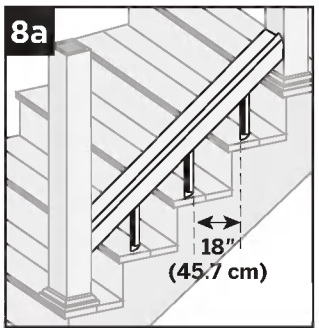

Option 2: If using Designer Balusters for Foot Blocks

8b. Measure and cut square balusters for foot blocks every 18″ (45.7 cm). Secure foot blocks with 2″ (5.1 cm) 16 gauge finishing nails through sides of bottom rail.

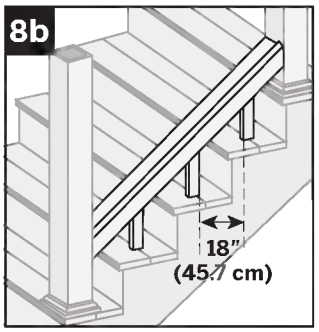

NOTE: *2″ (5.1 cm) screws can also be used. Pre-drilling would be required.*

Installing Bottom Rail

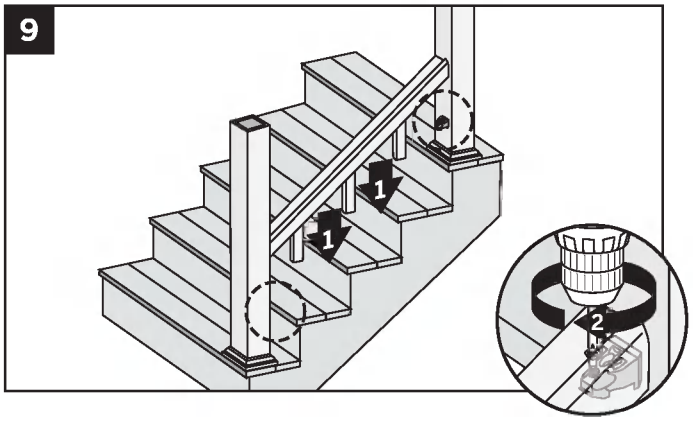

9. Secure bottom rail with screws through top of rail and into the outermost hole in RSBs.

   Bottom rail can also be secured to posts with 16 gauge finishing nails, toenailed from bottom of rail and 1" (2.5 cm) in from the posts.

DETERMINING NUMBER OF BALUSTERS AND SPACING

Number of balusters needed
Length of rail _____" ÷ 5.5 = _____balusters

» If number is odd, balusters will be centered.
» If number is even, balusters will be offset 2-3/4" (7 cm) from center.

Installing Stair Baluster Connectors

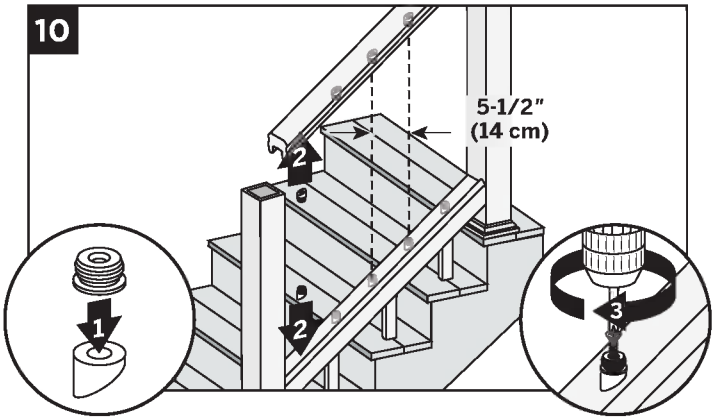

10. Place stair baluster connectors 5-1/2" (14 cm) on center and secure to top and bottom rails with screws.

NOTE: *Stair baluster connectors are sold separately.*
Black 3/4" (1.9 cm) Stair Baluster Connectors
Part number: ***BK075SCON***

Connecting Balusters to Bottom Rail

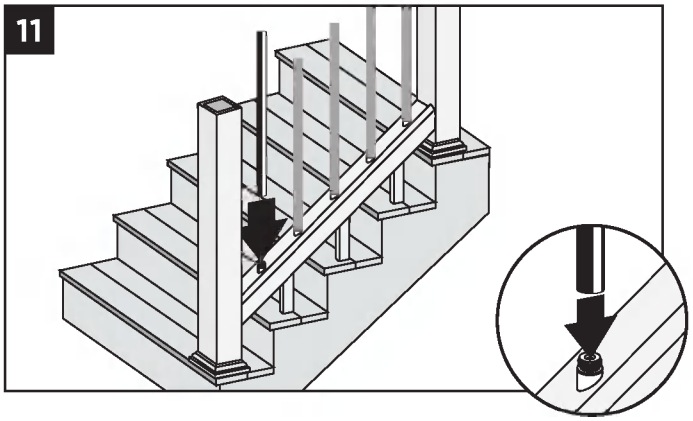

11. Lower each baluster down onto connectors on bottom rail.

Installing Top Rail

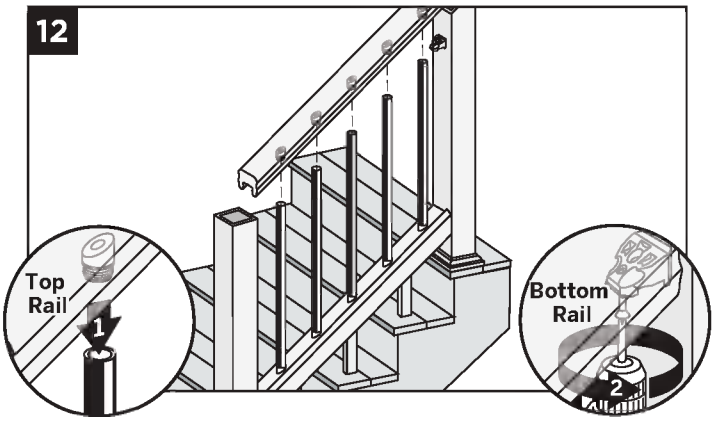

12. Lower top rail with connectors between posts onto RSBs and then place balusters on connectors. Secure rail sections with screws up through bottom of rail into RSBs.

Finishing Posts

13. Posts and post sleeves can be trimmed but this is not a requirement. Make sure tops of posts are level. Secure post caps with construction-grade adhesive. Clean-up any excess adhesive before drying.

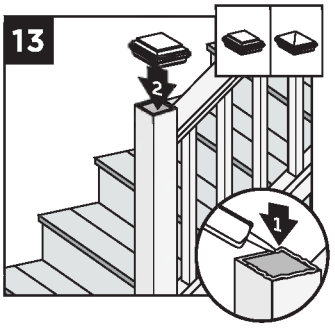

TREX® TRADITIONAL RAILING

Trex® Traditional Railing Parts List

A. Top rail
B. Lateral rail
C. Balusters
D. Post sleeve
E. Post sleeve skirt
F. Trex decking
G. TrexTrim™ or Trex fascia
H. Code-approved wood joist - 2″ x 8″ (5.1 cm x 20.3 cm)
I. Code-approved wood rim joist - 2″ x 8″ (5.1 cm x 20.3 cm) or larger
J. Foot block

» *Escapes and 5″ (12.7 cm) Contours cannot be used for top rail.*

» *6″ x 6″ (15.2 cm x 15.2 cm) post sleeve cannot be used with any Trex Traditional railing installs.*

» *Trex Post Mounts (for decking or concrete) cannot be used with Trex Traditional Railing.*

Traditional Raised/Option 1

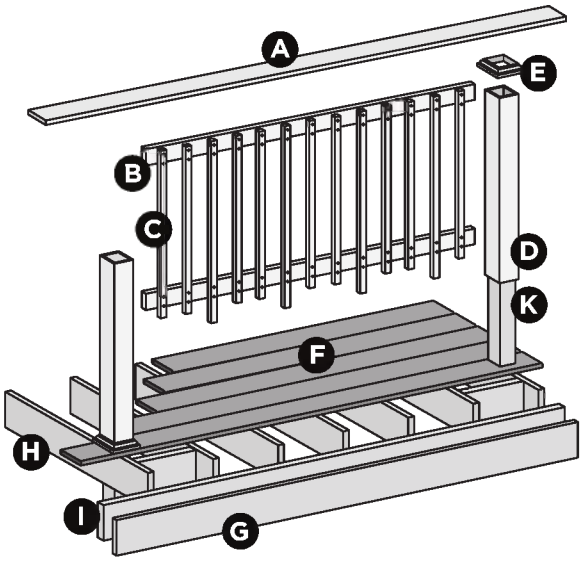

Traditional Raised/Options 2 and 3

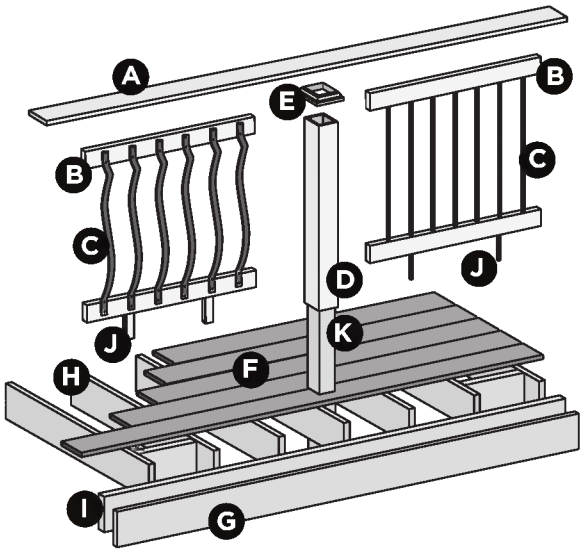

BALUSTER OPTIONS

Standard

Round Contemporary
(Only for raised railing design)

Architectural
(Only for raised railing design)

NOTE: *All Trex Traditional Railings are designed to span posts at maximum of 6′ (1.83 m) on center.*

NOTE: *The Trex guardrail system complies with current BOCA, ICBO, SBCCI and ICC model codes for a guardrail system. See local building codes for other requirements. For more detailed installation instructions, visit trex.com*

NOTE: *Trex Traditional Railings are designed to be installed OVER the decking frame or on inside of rim joist. Notching of pressure treated posts or posts installed on outside of rim joist are not allowed.*

TREX® TRADITIONAL RAILING

Traditional Railing Styles

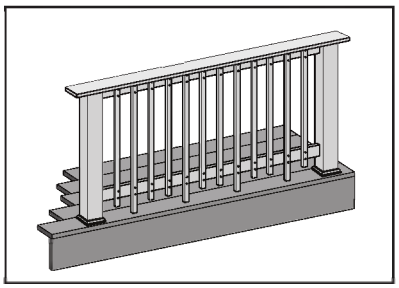

With Standard Trex Designer Balusters/Option 1

A. Pressure-treated post with Trex Designer post sleeve or Trex Transcend® 4" x 4" (10.2 cm x 10.2 cm) post sleeve
B. Deck board top rail
   NOTE: DO NOT USE *with Escapes.*
C. 2" x 4" (5.1 cm x 10.2 cm) Lateral top and bottom rail
D. Trex Designer balusters

See page 93 for "How to Install Raised Railing/Option 1".

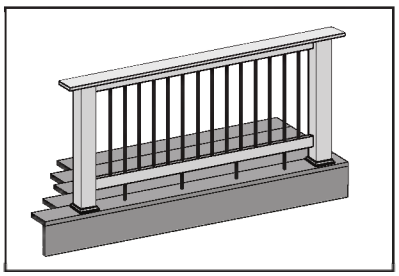

With Contemporary Balusters/Option 2

A. Pressure-treated post with Trex Designer post sleeve or Trex Transcend® 4" x 4" (10.2 cm x 10.2 cm) post sleeve
B. Deck board top rail
   NOTE: DO NOT USE *with Escapes.*
C. 2" x 4" (5.1 cm x 10.2 cm) lateral top rail
D. Trex Traditional Contemporary balusters

See page 95 for "How to Install Raised Railing/Option 2".

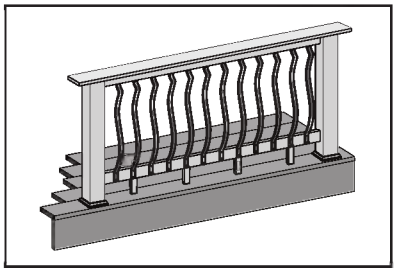

With Architectural Balusters/Option 3

A. Pressure-treated post with Trex Designer post sleeve or Trex Transcend® 4" x 4" (10.2 cm x 10.2 cm) post sleeve
B. Deck board top rail
   NOTE: DO NOT USE *with Escapes.*
C. 2" x 4" (5.1 cm x 10.2 cm) lateral top rail
D. Trex Traditional Architectural balusters

See page 99 for "How to Install Raised Railing/Option 3".

TRADITIONAL COLORS: *See inside back cover for color palette.*

HOW TO INSTALL RAISED RAILING
TREX® TRADITIONAL/OPTION 1

Rails BETWEEN Posts with STANDARD Trex Balusters

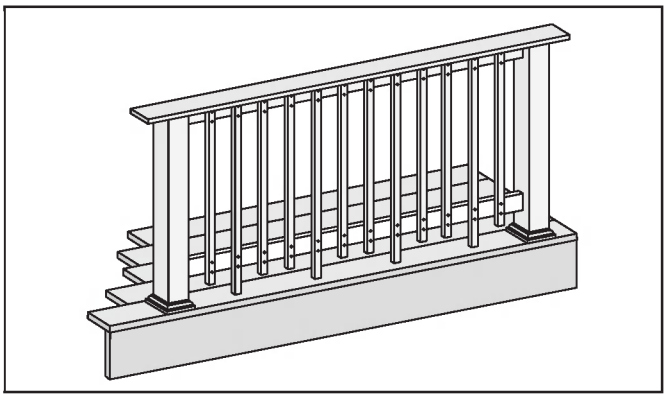

Installing Pressure-Treated Posts

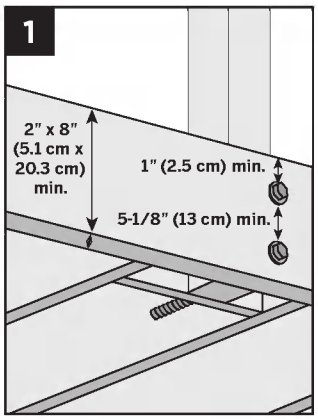

» Attach posts using 1/2" (1.3 cm) carriage bolts.

» Minimum joist size is 2" x 8" (5.1 cm x 20.3 cm).

» Top bolt must be 1" (2.5 cm) from top of joists.

» Bottom bolts must be 5-1/8" (13 cm) from top bolts.

NOTE: *Blocking can be added for extra strength.*

Installing Post Sleeve Skirts and Post Sleeves

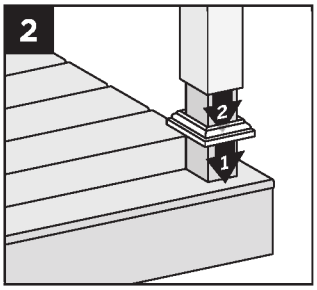

2. Slide post skirt over post and down to rest on decking surface. Slide post sleeve over post and position inside post skirt.

NOTE: *Shims can be used to plumb post sleeves.*

Cutting Posts to Length and Installing Top Rail

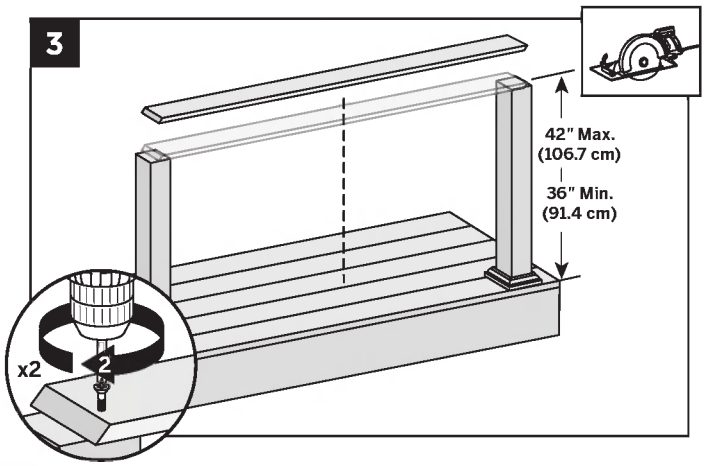

3. Cut posts to designated height as measured from top of decking surface. Measure distance between posts from center-to-center.

   Make scarf cuts on each end of deck board and use two exterior-approved screws per end to secure boards to posts with board centered over posts.

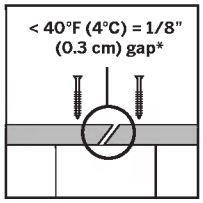

NOTE: *If installing at below 40°F (4°C) leave 1/8" (0.3 cm) gap in scarf joints between boards.*

Cutting Lateral Rails

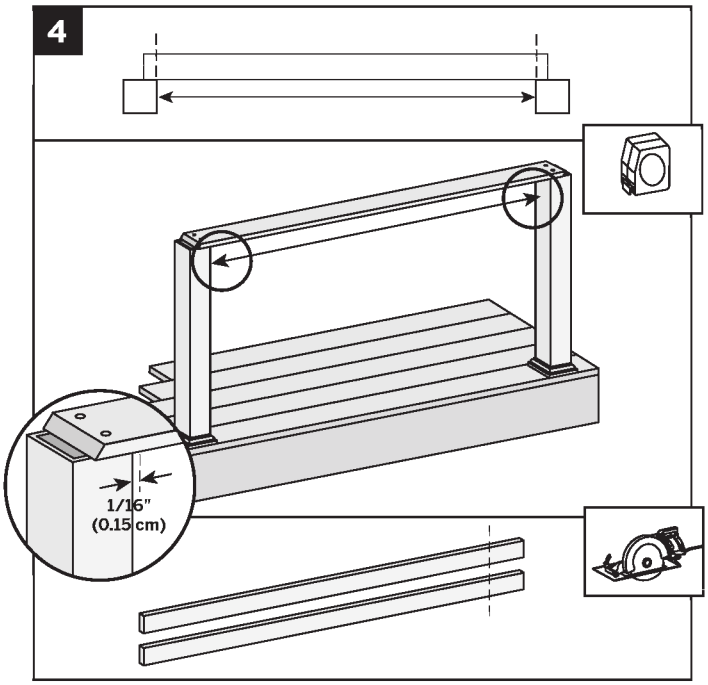

4. Measure distance between inside edges of posts and cut two 2" x 4" (5.1 cm x 10.2 cm) lateral rails to fit. Leave 1/16" (0.15 cm) gap at each end for cold weather expansion.

HOW TO INSTALL RAISED RAILING/CONTINUED
TREX® TRADITIONAL/OPTION 1

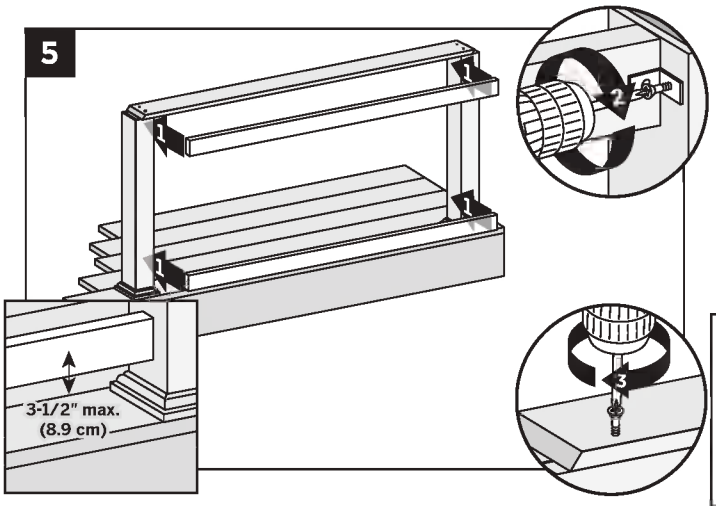

Installing Balusters

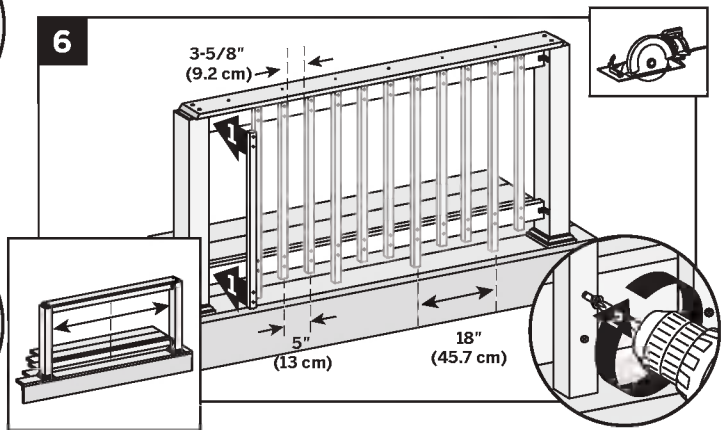

5. Center upper lateral rails under top rails to posts attaching with "L" brackets or equivalent construction method. (If toenailing screws into lateral railing, predrill these holes first to help prevent splitting and mushrooming of the screw.) Secure with 2-1/2" (6.4 cm) composite-approved screws and attach top rail to lateral rail with one screw every 12" (30.5 cm). Bottom rails attach with "L" brackets or equivalent construction method with 3-1/2" (8.9 cm) maximum clearance above deck surface.
6. Cut balusters to length, pre-drill two holes at top and bottom sides that will face outward on each baluster. Locate the center between posts, mark and place first baluster and secure with four 2-1/2" (6.4 cm) exterior-approved screws. Space balusters to the left and right a maximum of 3-5/8" (9.2 cm) edge-to-edge or 5" (13 cm) on center.
7. One baluster must extend to decking surface every 18" (45.7 cm). Typically four per 6' (1.8 m) application.

HOW TO INSTALL STAIR RAILING
TRADITIONAL RAISED/OPTION 1

Installing Posts for Stair Railing

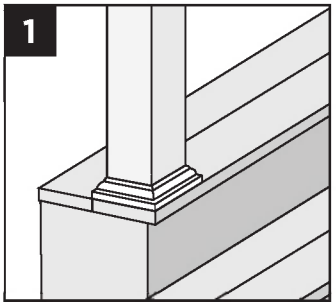

1. In most cases, a pressure-treated post and or post sleeve longer than 39" (99.1 cm) is required for the lower stair rail sections to accommodate stair angle. Both top and bottom posts need to be installed on outside corners (nose) of stair treads.

NOTE: *Posts, post sleeve skirts, and post sleeves are installed per standard Traditional railing instructions.* *See page 93.*

Measuring and Cutting Railings

2. Determine length and angle of top and lateral rails. Cut and install top rails per specific option chosen for Traditional railing.

   NOTE: *Allow a minimum clearance of 1" (2.5 cm) from stair treads.*

   Cut lateral rails to proper angle and install per specific option chosen for Traditional railing.

Cutting and Installing Balusters

3. Cut balusters to proper length and install per specific option chosen for Traditional railing.

HOW TO INSTALL RAISED RAILING
TREX® TRADITIONAL/OPTION 2

Rails BETWEEN Posts with CONTEMPORARY Balusters

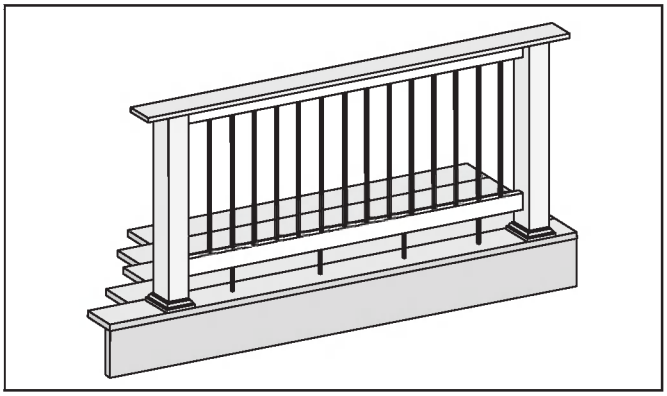

1. **Attaching Posts, Post Sleeve Skirts, and Post Sleeves** *See instructions on page 93.*

Cutting Posts and Lateral Rails to Length

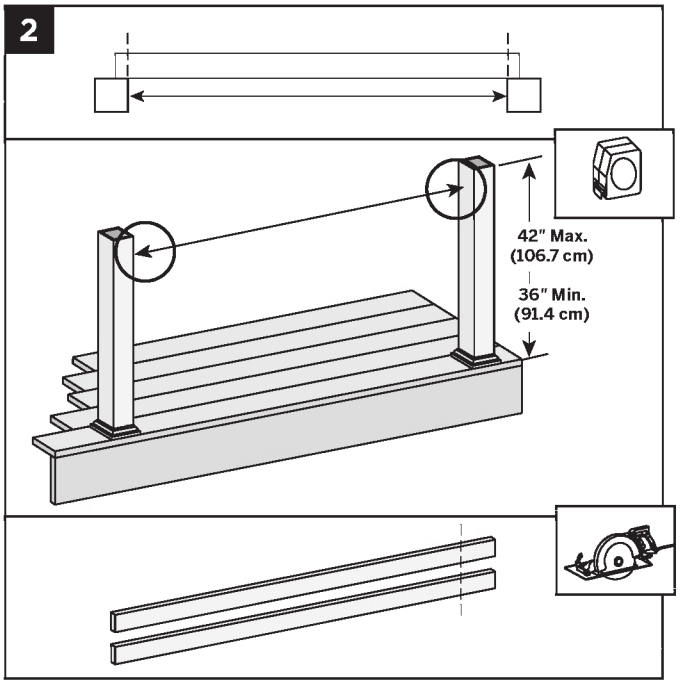

2. Cut posts to length. Measure distance between inside edges of posts and cut two 2" x 4" (5.1 cm x 10.2 cm) lateral rails to fit. Leave 1/16" (0.15 cm) gap at each end for cold weather expansion.

Installing Foot Blocks

NOTE: *This step is done* ***BEFORE*** *you attach the 2" x 4" (5.1 cm x 10.2 cm) bottom lateral rail to posts.*

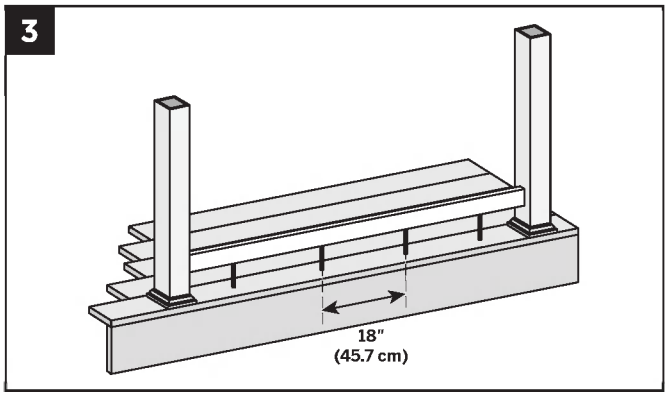

3. **Option 1:** Cut round balusters for foot blocks and place every 18" (45.7 cm). Secure in same method as balusters on lateral bottom rail and deck surface.

   Option 2: Cut square balusters for foot blocks and place every 18" (45.7 cm) on lateral bottom rail. Toenail screws into foot blocks and bottom rail to secure.

Securing Bottom Lateral Rail

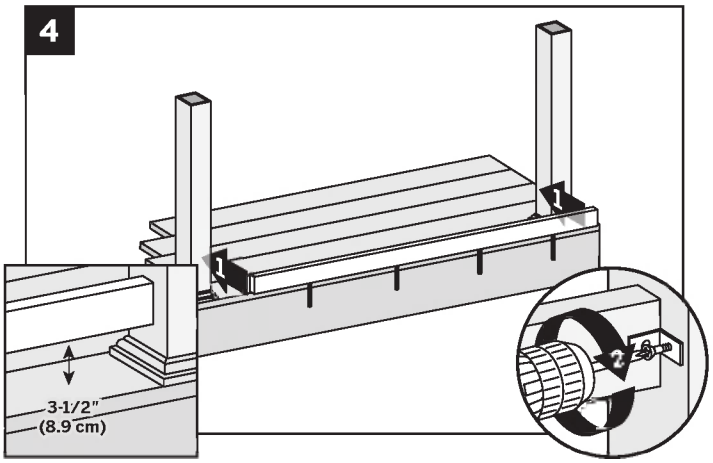

4. Place bottom lateral rail between posts and attach using "L" brackets or equivalent construction method. Secure with 2-1/2" (6.4 cm) composite-approved screws.

BALUSTER SIZE AND SPACING OPTIONS

For 36″ (91.4 cm) rail height, use Trex 26″ (66 cm) contemporary balusters. Part number: **BK3Q26RBK**

For 42″ (106.7 cm) rail height, use Trex 32″ (81.3 cm) contemporary balusters. Part number: **BK3Q32RBK**

Measure baluster spacing
Length of rail _____″ ÷ 4.5 = _____balusters

» If number is odd, balusters will be centered.
» If number is even, balusters will be offset 2-1/4″ (5.7 cm) from center.

Installing Baluster Connectors

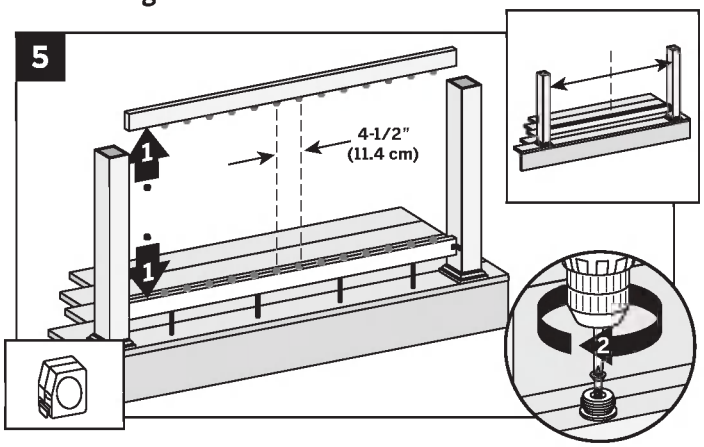

5. Mark center on top and bottom lateral rails and attach baluster connectors, 4-1/2″ (11.4 cm) on center.

NOTE: *Purchase level baluster connectors separately. Black 3/4″ (1.9 cm) Horizontal Baluster Connectors are Part number:* ***BK075HCON***

Installing Balusters

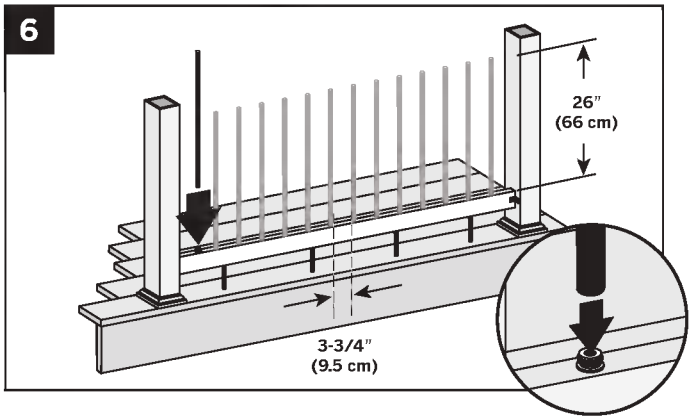

6. Insert balusters into connectors on bottom lateral rail.

Securing Upper Lateral Rail

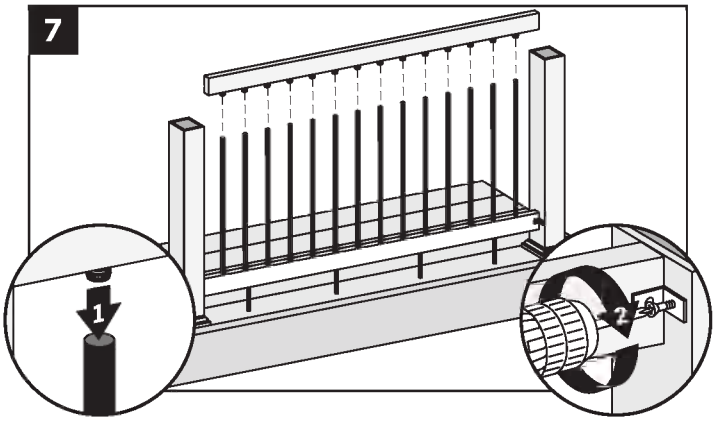

7. Position top lateral rail between posts and lower to insert balusters into connectors. Attach both ends to posts using "L" brackets or equivalent construction method. Secure with 2-1/2″ (6.4 cm) composite-approved screws.

Installing Top Rail

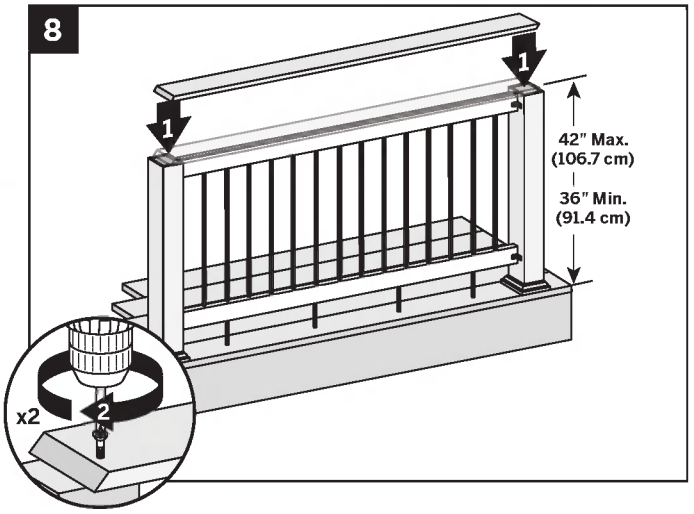

8. Measure distance between the posts from center-to-center.

Make scarf cuts on each end of deck board and use two exterior-approved screws per end to secure boards to posts with board centered over posts. Secure with 2-1/2" (6.4 cm) composite-approved screws every 12 inches.

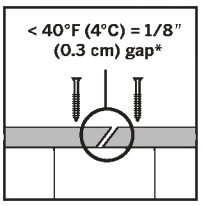

NOTE: *If installing at below 40°F (4°C), leave 1/8″ (0.3 cm) gap in scarf joints between boards.*

HOW TO INSTALL RAISED STAIR RAILING
TREX® TRADITIONAL/OPTION 2

Installing Stair Railing with Contemporary Balusters

BALUSTER OPTIONS AND CONNECTORS

For 36" (91.4 cm) rail height, use Trex 26" (66 cm) contemporary balusters. Part number: **BK3Q26RBK**

For 42" (106.7 cm) rail height, use Trex 32" (81.3 cm) contemporary balusters. Part number: **BK3Q32RBK**

Black 3/4" (1.9 cm) stair baluster connectors
Part number: **BK075SCON**

Measure baluster spacing
Length of rail _____" ÷ 5.5 = _____balusters

» If number is odd, balusters will be centered.
» If number is even, balusters will be offset 2-3/4" (7 cm) from center.

1. **Installing Posts for Stair Railing**
See instructions on page 94.

Cutting Lateral Rails and Measuring Baluster Spacing

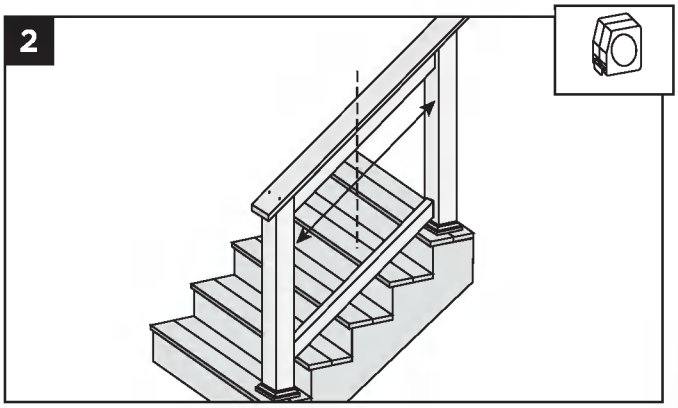

2. Cut top and bottom rails the distance between posts and determine angle of end cuts and mark centers. Use equation *(above)* to determine number of balusters needed.

Installing Foot Blocks

NOTE: *This step is done* ***BEFORE*** *you attach the 2" x 4" (5.1 cm x 10.2 cm) bottom lateral rail to posts.*

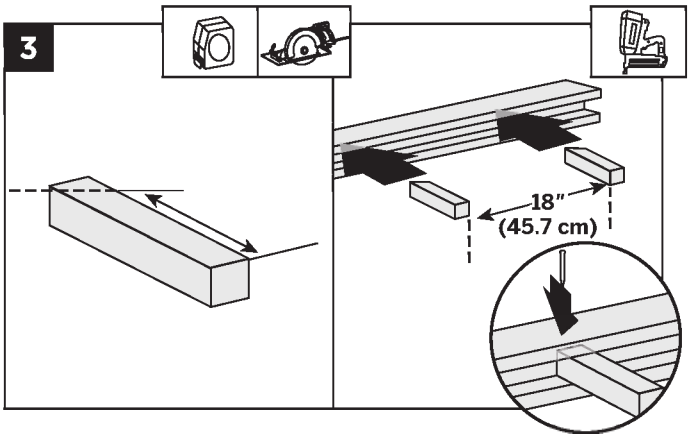

3. **Option 1:** Cut square balusters for foot blocks and place every 18" (45.7 cm) on lateral bottom rail. Toenail screws into foot blocks and bottom rail to secure.

   Option 2: Cut round balusters for foot blocks and place every 18" (45.7 cm). Secure in same method as balusters on lateral bottom rail and deck surface.

Installing Baluster Connectors

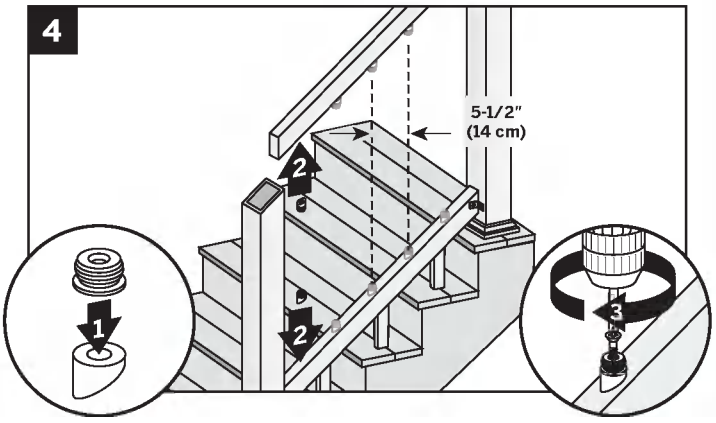

4. Install stair baluster connectors and adaptors to top and bottom rails, 5-1/2" (14 cm) on center.

NOTE: *Black 3/4" (1.9 cm) stair baluster connectors are sold separately. Part number* ***BK075SCON***

Securing Bottom Lateral Rail

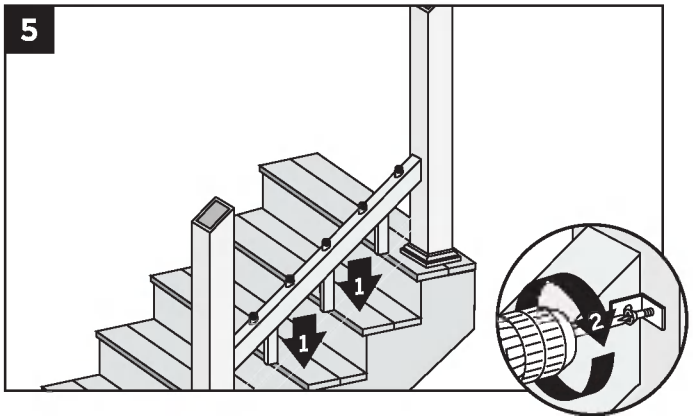

5. Place bottom lateral rail between posts and attach using "L" brackets or equivalent construction method. Secure with 2-1/2" (6.4 cm) composite-approved screws.

Installing Balusters and Top Lateral Rail

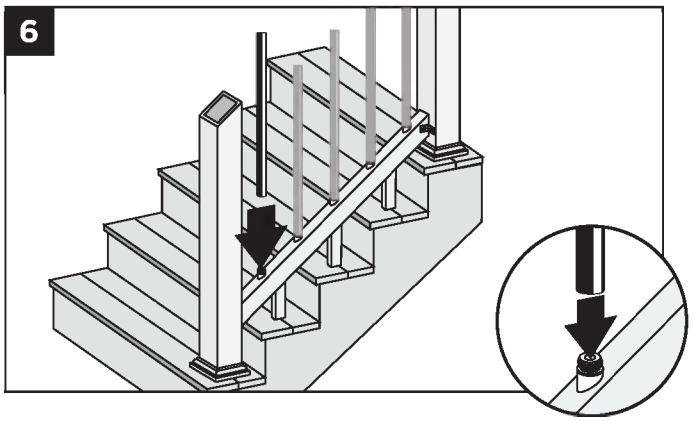

6. Insert end of balusters into adapters on bottom rail.

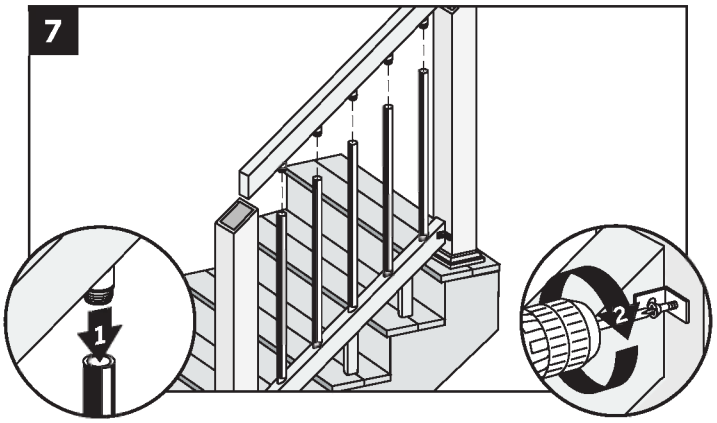

7. Insert end of balusters to adapters on top lateral rail and connect rail to posts with "L" brackets or equivalent construction methods.

Installing Top Hand Rail

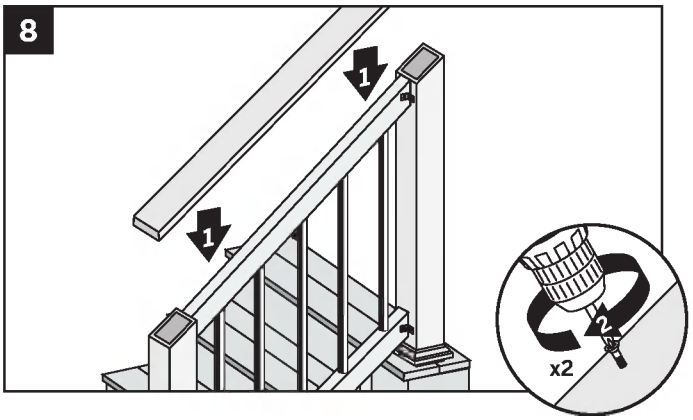

8. Center deck board across top of posts and attach using two exterior-approved screws positioned laterally on both ends. Secure with 2-1/2" (6.4 cm) composite-approved screws every 12 inches.

HOW TO INSTALL RAISED RAILING
TREX® TRADITIONAL/OPTION 3

Rails BETWEEN Posts with ARCHITECTURAL Balusters

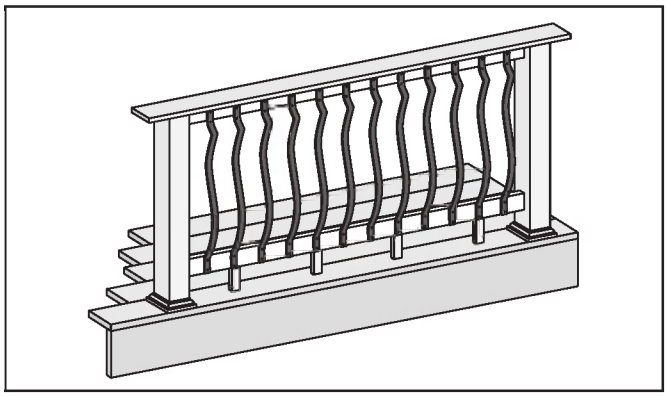

1. **Attaching Posts, Post Sleeve Skirts, and Post Sleeves** *See instructions on page 93.*

Cutting Posts to Length and Installing Top Rail

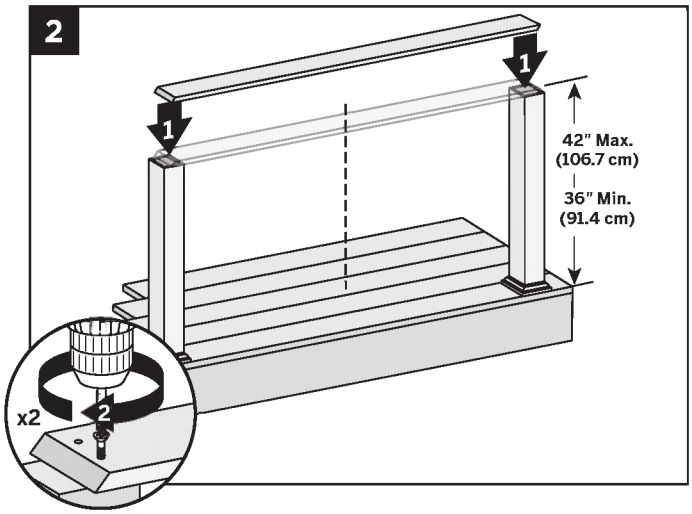

2. Cut posts to length. Measure distance between posts from center-to-center.

   Make scarf cuts on each end of deck board and use two exterior-approved screws per end to secure boards to posts with board centered over posts.

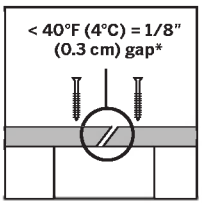

***NOTE:** If installing below 40°F (4°C) leave 1/8" (0.3 cm) gap between deck boards for thermal expansion.*

Cutting Lateral Rail

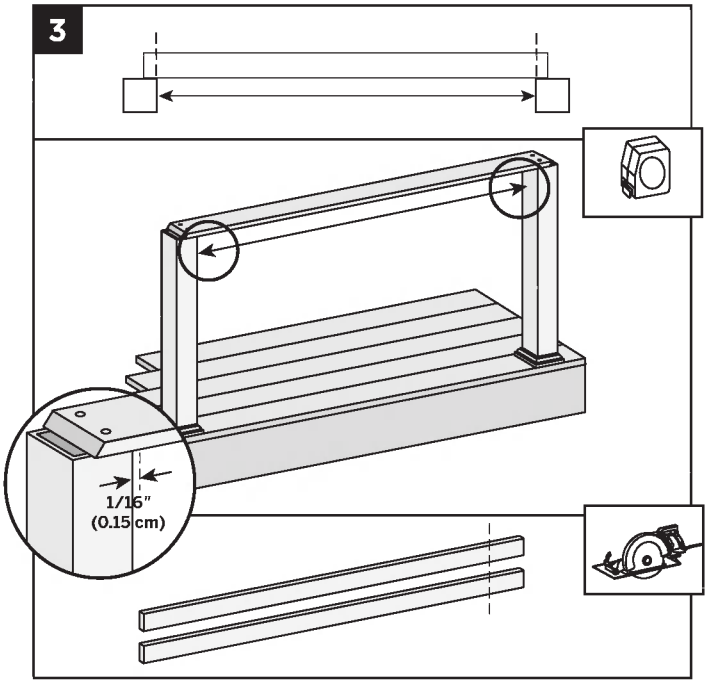

3. Measure distance between inside edges of posts and cut two 2" x 4" (5.1 cm x 10.2 cm) lateral rails to fit. Leave 1/16" (0.15 cm) gap at each end for cold weather expansion.

Installing Foot Blocks

***NOTE:** For ease of installation of foot blocks, install **BEFORE** attaching the bottom rail to the post.*

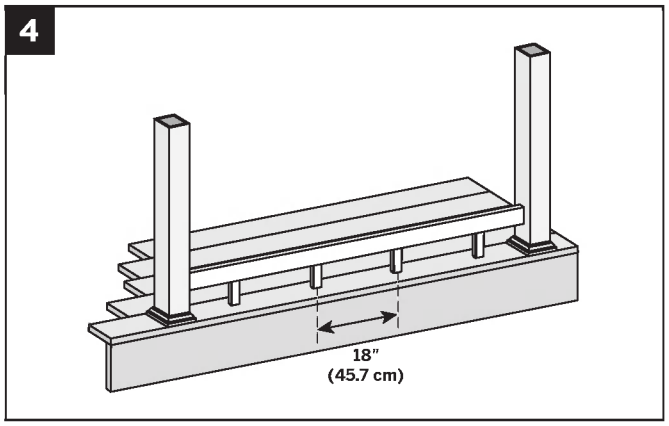

4. Cut square balusters to fit under bottom lateral rail and locate every 18" (45.7 cm). Toenail screws into foot blocks and bottom rail to secure.

Attaching Lateral Rail with L-Brackets

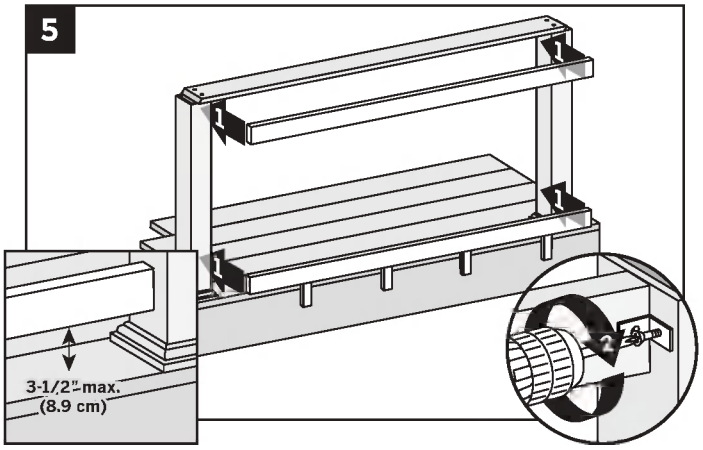

5. Center lateral rail under top rail and attach to posts using an "L" bracket or equivalent construction method. Secure with 2-1/2" (6.4 cm) composite-approved screws and attach top rail with one screw every 12" (30.5 cm).

BALUSTER SIZE AND SPACING OPTIONS

For 36" (91.4 cm) rail height, use Trex 32-1/4" (81.9 cm) architectural balusters. *Total height from top rail to deck surface is 35-1/4" (89.5 cm).*
Part number: **BK0132VBK**

For 42" (106.7 cm) rail height, use Trex 40" (101.6 cm) architectural balusters. *Total height from top rail to deck surface is 40" (101.6 cm).*
Part number: **BK0140VBK**

Measure baluster spacing
Length of rail _____" ÷ 4.5 = _____balusters

» If number is odd, balusters will be centered.
» If number is even, balusters will be offset 2-1/4" (5.7 cm) from center.

Installing Balusters

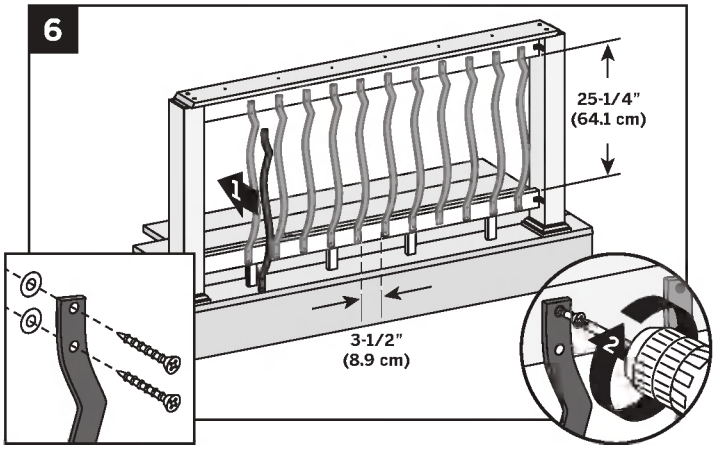

6. Locate the center between posts, mark and place first baluster and secure with four 1-1/2" (6.4 cm) exterior-approved screws. Space balusters to the left and right a maximum of 3-1/2" (8.9 cm) edge-to-edge.

NOTE: *A 2" x 4" (5.1 cm x 10.2 cm) can be used for spacing architectural balusters.*

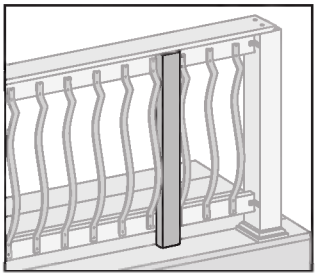

HOW TO INSTALL RAISED STAIR RAILING
TREX® TRADITIONAL/OPTION 3

Installing Stair Railing with Architectural Balusters

BALUSTER OPTIONS AND CONNECTORS

For 36″ (91.5 cm) rail height, use Trex 32″ (81.3 cm) architectural balusters.
Part number: **BK0132VBK**

For 42″ (106.7 cm) rail height, use Trex 40″ (101.6 cm) architectural balusters.
Part number: **BK0140VBK**

Measure baluster spacing
Length of rail _____″ ÷ 5.5 = _____balusters

» If number is odd, balusters will be centered.
» If number is even, balusters will be offset 2-3/4″ (7 cm) from center.

1. **Installing Posts for Stair Railing**
   See instructions on page 94.

Cutting Lateral Rails and Measuring Baluster Spacing

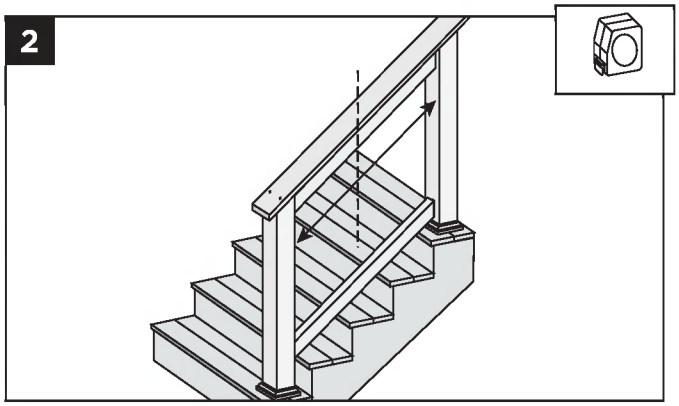

2. Cut top and bottom rails the distance between posts and determine angle of end cuts and mark centers. Use equation *(above)* to determine number of balusters needed.

Installing Foot Blocks

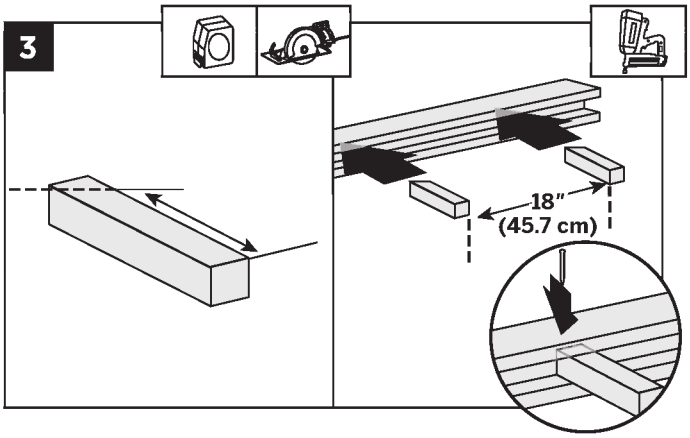

3. Cut square balusters for foot blocks and place every 18" (45.7 cm) on lateral bottom rail. Toenail screws into foot blocks and bottom rail to secure.

Installing Top and Bottom Lateral Rail

4. Connect rails to posts with "L" brackets or equivalent construction methods.

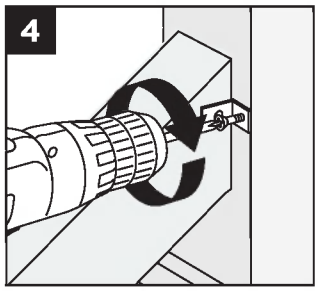

Installing Balusters

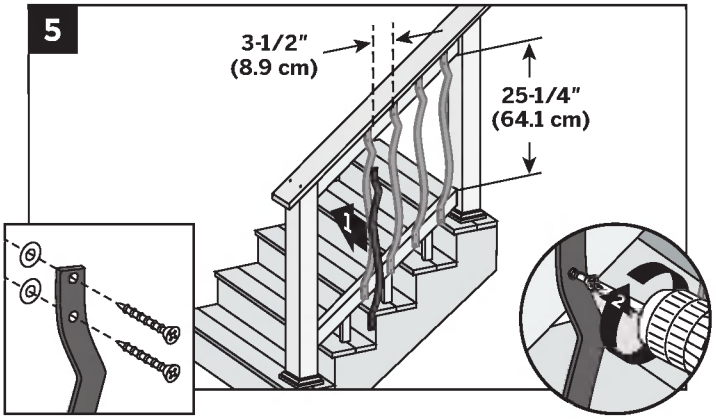

5. Measure distance between posts to determine center point of top and bottom rails. Install first baluster with four 1-1/2" (6.4 cm) exterior-approved screws. Space balusters a maximum of 3-1/2″ (8.9 cm) edge-to-edge.

NOTE: *A 2" x 4" (5.1 cm x 10.2 cm) can be used for spacing the architectural balusters.*

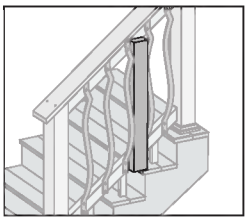

TREX® ADA RAILING

Stair Application

Horizontal Application

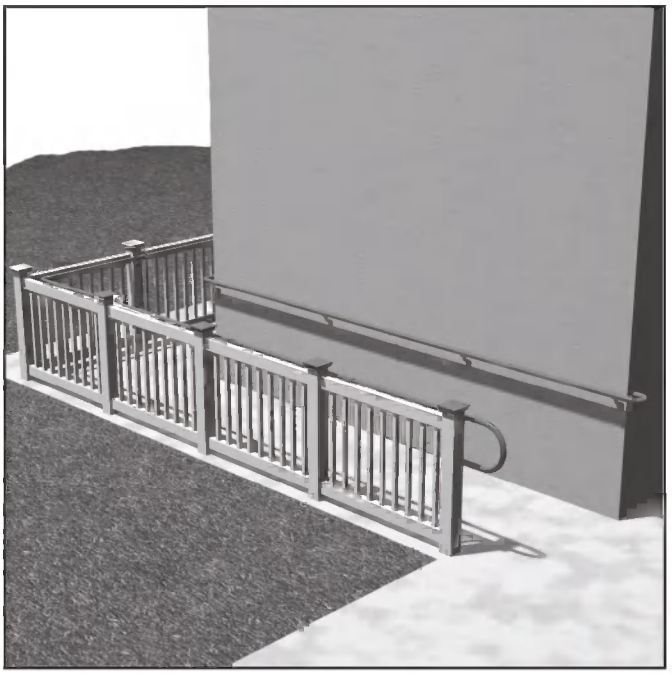

ADA Handrail Guidelines

1. You can install ADA handrails using various design applications such as those for stairs, ramps, and horizontal inclines. Designs include options for straight and 90° wall returns, 90° corners, and adjustable angles. Choose which is best for your needs before installing.

2. The handrail system top rail should be 34″ (86.4 cm) to 39″ (99.1 cm) above the surface. However, verifying height requirements with local building code officials before installing is important as codes vary in different areas.

3. Maintain a minimum clearance of 1-1/2″ (3.8 cm) between the handrail and any obstructions above or behind the handrail.

4. The end loop return at all landings must extend 12″ (30.5 cm) past the end of the ramp or stair application.

5. The slope of the handrail for the ramp should not exceed 1″ (2.5 cm) rise over a 12″ (30.5 cm) run.

6. The maximum recommended span between supports is 6′ (1.83 m) on center.

7. For ramps and stairs, cut railings along with the end loops and/or post returns to the proper angle using a miter saw to ensure proper fit.

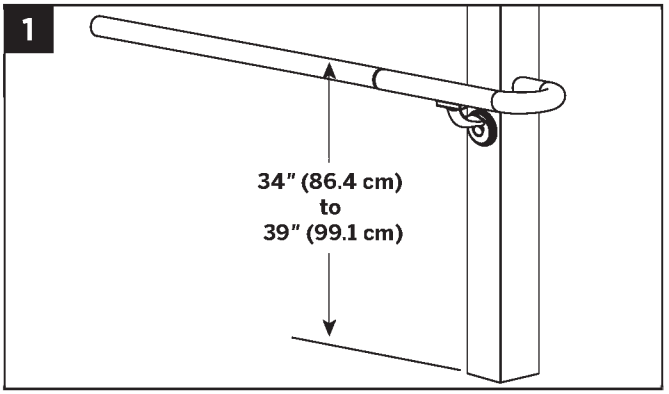

HOW TO INSTALL TREX® ADA RAILING

90° Wall Return

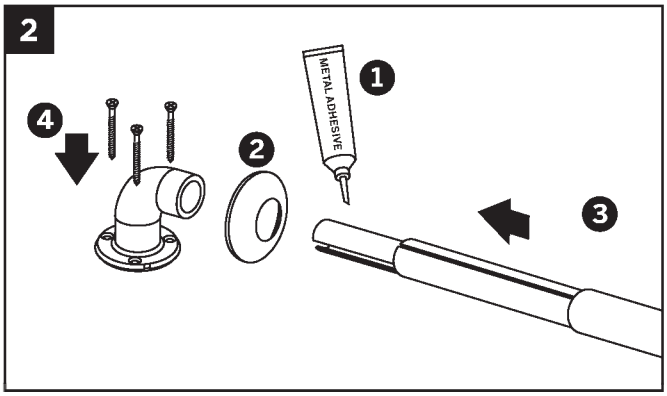

Cut the aluminum and PVC tube to proper length.

1. Apply adhesive to all metal contact surfaces.
2. Make sure flange cover is placed over PVC rail prior to assembly.
3. Slide straight joiner into wall return and aluminum rail support.
4. Attach mounting flange to desired surface. Snap flange cover into place.

NOTE: *Hardware not included.*

Straight Wall Return

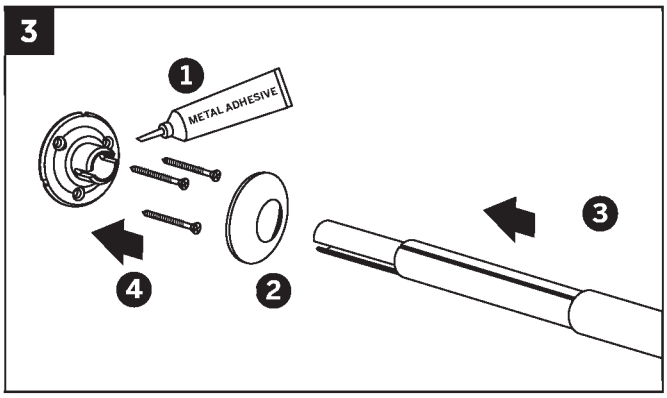

Cut the aluminum and PVC tube to proper length.

1. Apply adhesive to all metal contact surfaces.
2. Make sure flange cover is placed over PVC rail prior to assembly.
3. Insert straight wall return into aluminum rail support.
4. Attach mounting flange to desired surface. Snap flange cover into place.

NOTE: *Hardware not included.*

Handrail Bracket

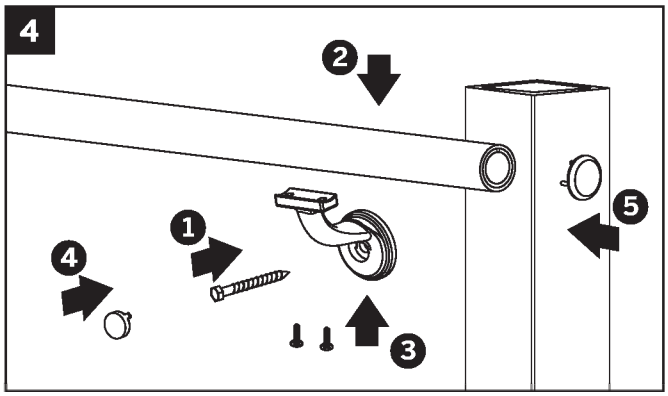

1. Predrill hole using 1/4″ (0.6 cm) bit and attach bracket to mounting surface using an appropriate connector (a 3/8″ (1 cm) lag bolt at least 2″ (5.1 cm) long should be used when mounting to a wood surface).

NOTE: *Lag bolt is not included.*

2. Place the rail at appropriate location on bracket.
3. Pre-drill two holes in the rail with an 11/64″ (0.4 cm) drill bit at appropriate location and attach with screws (provided).
4. Snap bolt cover into place.
5. Using PVC adhesive, attach handrail end cap (sold separately) to unfinished end of rail.

90° Corner

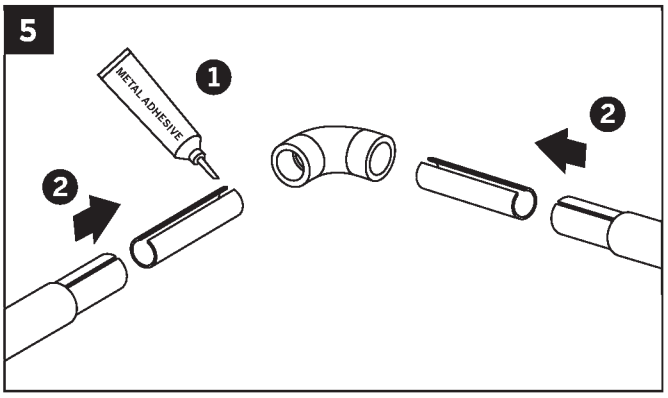

Cut the aluminum and PVC tube to proper length.

1. Apply adhesive to all metal contact surfaces.
2. Slide straight joiner into each side of corner and aluminum rail supports.

NOTE: *A PVC adhesive may be used to ensure a tight seam on the exterior tube. Make sure adhesive cures per manufacturer's instructions.*

HOW TO INSTALL TREX® ADA RAILING

End Loop - Horizontal

18″ x 12″ x 18″ (45.7 cm x 30.5 cm x 45.7 cm)

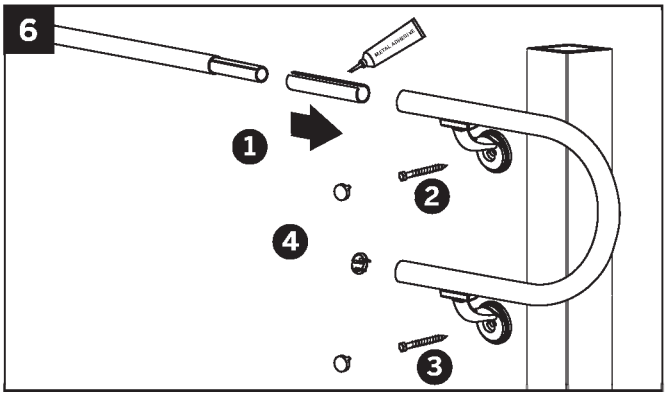

1. Apply adhesive to all metal contact surfaces. Slide straight joiner into end loop and aluminum rail support.
2. Pre-drill holes using 1/4″ (0.6 cm) drill bit and attach top bracket to mounting surface using an appropriate connector (a 3/8″ (1 cm) lag bolt at least 2″ (5.1 cm) long should be used when mounting to a wood surface).
3. Attach bottom bracket in the same manner. Place end loop in appropriate location on bracket. Pre-drill four holes in end loop with an 11/64″ (0.4 cm) drill bit at appropriate location and attach with screws (provided). Snap bolt covers into place.
4. Using PVC adhesive, attach hand rail end cap (sold separately) to unfinished end of rail.

End Loop - Angled

18″ x 12″ x 18″ (45.7 cm x 30.5 cm x 45.7 cm)

NOTE: *Rail and end loop must be cut to appropriate angles before installing.*

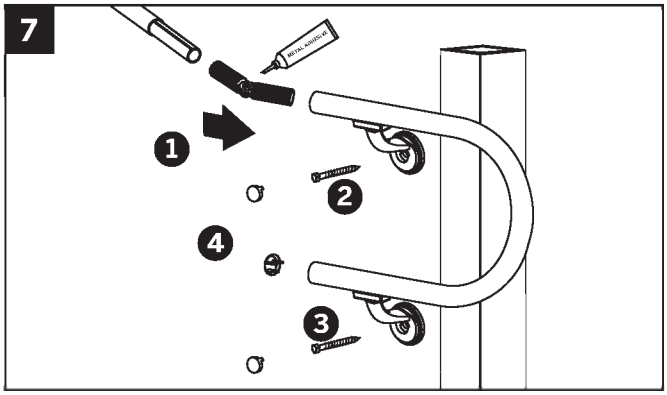

1. Apply adhesive to all metal contact surfaces. Slide adjustable joiner into end loop and aluminum rail support. Make sure adjustable joiner is plumb.
2. Pre-drill holes using 1/4″ (0.6 cm) drill bit and attach top bracket to mounting surface using an appropriate connector (a 3/8″ (1 cm) lag bolt at least 2″ (5.1 cm) long should be used when mounting to a wood surface).
3. Attach bottom bracket in the same manner. Place end loop in appropriate location on bracket. Pre-drill four holes in end loop with an 11/64″ (0.4 cm) drill bit at appropriate location and attach with screws (provided). Snap bolt covers into place.
4. Using PVC adhesive, attach hand rail end cap (sold separately) to unfinished end of rail.

Post Return - Horizontal

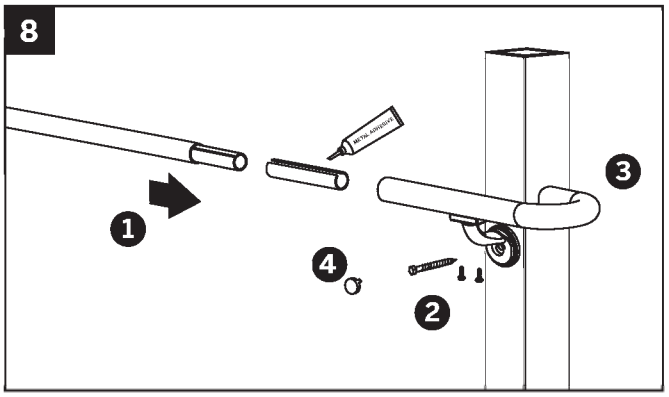

1. Apply adhesive to all metal contact surfaces. Slide straight joiner into post return and aluminum rail support.
2. Pre-drill holes using 1/4″ (0.6 cm) drill bit and attach bracket to mounting surface using an appropriate connector (a 3/8″ (1 cm) lag bolt at least 2″ (5.1 cm) long should be used when mounting to a wood surface).
3. Place post return at appropriate location on bracket. Pre-drill two holes in post return with an 11/64″ (0.4 cm) drill bit at appropriate location and attach with screws (provided).
4. Snap bolt covers into place.

NOTE: *A PVC adhesive may be used to ensure a tight seam on the exterior tube. Make sure adhesive cures per manufacturer's instructions.*

HOW TO INSTALL TREX® ADA RAILING

Post Return - Angled

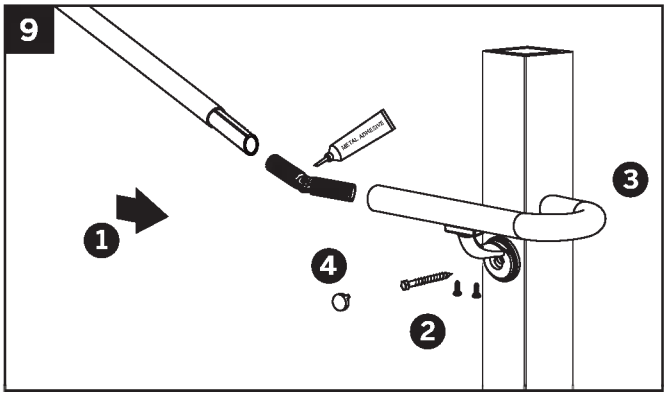

1. Apply adhesive to all metal contact surfaces. Slide adjustable joiner into post return and aluminum rail support. Make sure adjustable joiner is plumb.
2. Pre-drill holes using 1/4" (0.6 cm) drill bit and attach bracket to mounting surface using an appropriate connector (a 3/8" (1 cm) lag bolt at least 2" (5.1 cm) long should be used when mounting to a wood surface).
3. Place post return at appropriate location on bracket. Pre-drill two holes in post return with an 11/64" (0.4 cm) drill bit at appropriate location and attach with screws (provided).
4. Snap bolt cover into place.

Straight Joiner

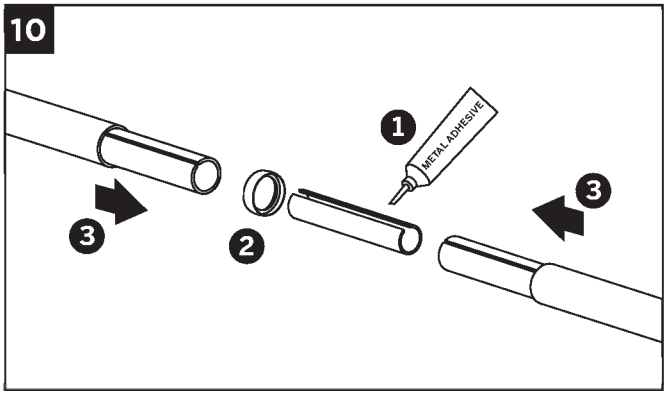

1. Apply adhesive to all metal contact surfaces.
2. **Optional:** Position joint ring between rail sections.
3. Slide joiner into both aluminum rail supports until the joint is tight.

Angled Corner

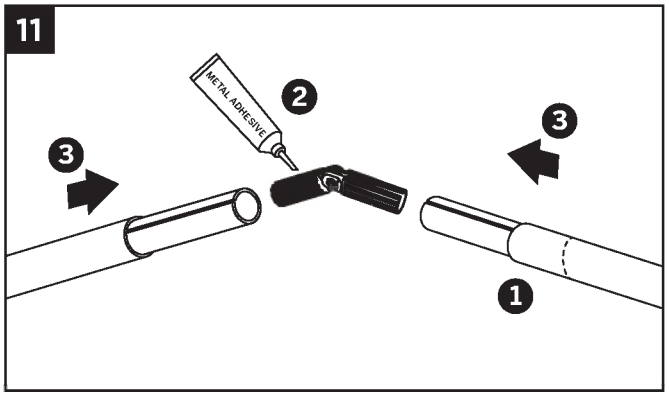

1. Cut the aluminum and PVC tube to proper length at desired angle.
2. Apply adhesive to all metal contact surfaces.
3. Slide rails together until the adjustable joint is tight.

NOTE: *A PVC adhesive may be used to ensure a tight seam on the exterior tube. Make sure adhesive cures per manufacturer's instructions.*

WARRANTIES

TREX TRANSCEND®, TREX ENHANCE® & TREX UNIVERSAL FASCIA LIMITED FADE & STAIN WARRANTY

For the term set forth below, Trex Company, Inc. (hereinafter "Trex") warrants to the original end-user purchaser (the "Purchaser") that Trex Transcend® decking or porch planks, Trex Enhance® decking, or Trex Universal Fascia, as the case may be (the "Product") will perform, under normal use and service conditions, as follows:

Term of Warranty: The term of this warranty shall begin on the date of original purchase, and shall end (1) twenty-five (25) years thereafter for a residential application of the Product, and (2) ten (10) years thereafter for a commercial application of the Product.

Residential/Commercial Application: For purposes of this warranty, a "residential application" shall refer to an installation of the Product on an individual residence, and a "commercial application" shall refer to any installation of the Product other than on an individual residence.

Fade Resistance: The Product shall not fade in color from light and weathering exposure as measured by color change of more than 5 Delta E (CIE) units.

The Product is designed to resist fading. No material is fade proof when exposed to years of UV exposure and the elements. The Product is designed to resist fading, and will not in any event fade by more than 5 Delta E (CIE) units.

Stain Resistance: The Product shall be resistant to permanent staining resulting from spills of food and beverage items including ketchup, mustard, salad oils, tea, wine, coffee, fruit punch, barbeque sauce, grease, sodas and other food and beverage related items that would typically be present on a residential deck, or mold and mildew naturally occurring in the environment, provided that such substances are removed from the Product with soap and water or mild household cleaners after no more than one (1) week of exposure of the food or beverage to the surface or first appearance of the mold and mildew.

Notwithstanding the foregoing, Trex does not warrant that the Product is stain-proof, and does not warrant stain resistance resulting from spilled or otherwise applied food and beverage substances which are not properly cleaned as provided above within one (1) week of exposure. In addition, materials not covered in the stain resistant warranty include abrasive compounds of acidic or basic pH, paints or stains, strong solvents, metallic rust or other abnormal deck use items, and non-food and non-beverage substances, including but not limited to, biocides, fungicides, plant food, or bactericides. Mold and mildew can settle and grow on any outdoor surface, including this Product. You should periodically clean your deck to remove dirt and pollen that can feed mold and mildew. This warranty does not cover mold and mildew which is not properly cleaned as provided above within one (1) week of first appearance.

Standard Trex Company Limited Warranty: This warranty is in addition to the standard Trex Company Limited Warranty that applies to all Trex products.

Transferability: With respect to a residential application, this warranty may be transferred one (1) time, within the five (5) year period beginning from the date of original purchase by the Purchaser, to a subsequent buyer of the property upon which the Trex products were originally installed. With respect to a commercial application, this warranty is freely transferable to subsequent buyers of the property upon which the Trex products were originally installed.

Exclusions from Warranty Coverage:

Exposure to Heat: Direct or indirect contact with extreme heat sources (over 275 degrees) may cause fading and may damage the surface of the Product, and any effects of such exposure are expressly excluded from coverage under this warranty.

Surface Damage: Never use metal shovels or sharp-edged tools to remove snow and ice on the surface of the Product. If the surface of the Product is damaged or punctured, this warranty will be voided.

Paint or Other Materials Applied to the Product: If paint or other coating materials are applied to the Product, this warranty will be voided.

Railing: This warranty does not cover Trex Transcend® railing components.

Other Exclusions: This warranty shall not cover any condition attributable to: (1) improper installation of the Product and/or failure to abide by Trex's installation guidelines, including but not limited to improper gapping; (2) use of the Product beyond normal use or service conditions, or in an application not recommended by Trex's guidelines and local building codes; (3) movement, distortion, collapse or settling of the ground or the supporting structure on which the Product is installed; (4) any act of God (such as flooding, hurricane, earthquake, lightning, etc.); (5) improper handling, storage, abuse or neglect of the Product by Purchaser, the transferee or third parties; (6) any fading or staining not on the walking surface of the Product (i.e., the underside or the ends of the Product); or (7) ordinary wear and tear.

Procedure for Making a Claim under this Warranty

In order to make a claim under this warranty, Purchaser must do the following:

1. If the Purchaser is making a claim relating to the warranty on stain resistance, Purchaser must do as follows:

   (a) Purchaser must try to clean the affected area of the deck by using the cleaning procedures described above within one (1) week of exposure of the food or beverage to the Product or first appearance of the mold and mildew.

   (b) If the affected area remains reasonably unsatisfactory after Purchaser has tried these cleaning procedures, then Purchaser must have the affected area of the deck professionally cleaned at Purchaser's expense.

   (c) If the affected area remains reasonably unsatisfactory after the professional cleaning, Purchaser may make a claim under this warranty, provided that such claim is made within thirty (30) days after the professional cleaning.

2. To make a claim under this limited warranty, Purchaser, or the transferee, shall send to Trex, within the warranty period referred to above, a description and photographs of the affected area of the Product, proof of purchase, and if the claim relates to the warranty on stain resistance, proof of compliance with paragraph 1. above, to the following address:

   Trex Company, Inc.
   Customer Relations
   160 Exeter Drive
   Winchester, VA 22603-8605

3. Upon confirmation by an authorized Trex representative of a valid claim hereunder, Trex's sole responsibility shall be, at its option, to either replace the affected item or refund the portion of the purchase price paid by Purchaser for such affected item (not including the cost of its initial installation). Replacement material will be provided that is as close as possible in color, design and quality as the replaced material, but Trex does not guarantee an exact match as colors and design may change.

4. If a valid warranty claim hereunder is made during years eleven (11) through twenty-five (25) after the original purchase for a residential application, recovery will be prorated. If Trex is providing replacement materials, it may elect to replace the percentage listed below of boards otherwise meeting the requirements for a claim, or if it is refunding the purchase price, it may elect to refund the percentage listed below of the purchase price of boards otherwise meeting the requirements for a claim.

YEAR OF WARRANTY CLAIM	PERCENTAGE RECOVERY
11	80%
12	80%
13	80%
14	60%
15	60%
16	60%
17	40%
18	40%

YEAR OF WARRANTY CLAIM	PERCENTAGE RECOVERY
19	40%
20	20%
21	20%
22	20%
23	10%
24	10%
25	10%

5. **THIS WARRANTY SHALL NOT COVER AND TREX SHALL NOT BE RESPONSIBLE FOR COSTS AND EXPENSES INCURRED WITH RESPECT TO THE REMOVAL OF AFFECTED PRODUCT OR THE INSTALLATION OF REPLACEMENT MATERIALS, INCLUDING BUT NOT LIMITED TO LABOR AND FREIGHT.**

UNDER NO CIRCUMSTANCES WILL TREX BE LIABLE FOR SPECIAL, INCIDENTAL OR CONSEQUENTIAL DAMAGES, WHETHER SUCH DAMAGES ARE SOUGHT IN CONTRACT, IN TORT (INCLUDING BUT NOT LIMITED TO NEGLIGENCE AND STRICT LIABILITY) OR OTHERWISE, AND TREX'S LIABILITY WITH RESPECT TO PRODUCTS SHALL IN NO EVENT EXCEED THE REPLACEMENT OF SUCH PRODUCTS OR REFUND OF THE PURCHASE PRICE, AS DESCRIBED ABOVE.

Some States or Provinces do not allow the exclusion or limitation of incidental or consequential damages, so the above limitation or exclusion may not apply to you. This warranty gives you specific legal rights, and you may also have other rights that vary from State to State or Province to Province.

Copyright © 2012 Trex Company, Inc.

TREX® LIMITED WARRANTY

Trex Company, Inc. (hereinafter "Trex") warrants to the original purchaser ("Purchaser") that, for the period of time set forth in the following sentence, under normal use and service conditions, TrexÐ products shall be free from material defects in workmanship and materials, and shall not split, splinter, rot or suffer structural damage from termites or fungal decay. The term of such warranty shall be twenty-five (25) years from the date of original purchase for a residential application, and ten (10) years from the date of original purchase for a commercial application. If a defect occurs within the warranty period, Purchaser shall notify Trex in writing and, upon confirmation by an authorized Trex representative of the defect, Trex's sole responsibility shall be, at its option, to either replace the defective item or refund the portion of the purchase price paid by Purchaser for such defective item (not including the cost of its initial installation).

Notwithstanding the foregoing, (a) with respect to Trex DeckLightingTM, the term of the warranty for the LED lights and housing shall be seven (7) years, the term of the warranty for the dimmer, timer and transformer shall be three (3) years, in each case provided that a Trex transformer is used, and any other parts or accessories shall not be warranted, (b) with respect to hardware for the Trex SurroundingsÐ gate (gate frame, hinges and screws), the term of the warranty shall be five (5) years, (c) with respect to Trex Decorative Balusters, the term of the warranty covering the paint coating shall be ten (10) years, and shall be prorated in the following manner: 100% replacement for the first five (5) years; and 50% replacement for the next five (5) years, and (d) this warranty shall not apply to Trex Elevations® steel deck framing, Trex RevealTM aluminum railing and TrexTrimTM (which each have separate warranties).

For purposes of this warranty, a "residential application" shall refer to an installation of the Product on an individual residence, and a "commercial application" shall refer to any installation of the Product other than on an individual residence.

THIS WARRANTY SHALL NOT COVER AND TREX SHALL NOT BE RESPONSIBLE FOR COSTS AND EXPENSES INCURRED WITH RESPECT TO THE REMOVAL OF DEFECTIVE TREX PRODUCTS OR THE INSTALLATION OF REPLACEMENT MATERIALS, INCLUDING BUT NOT LIMITED TO LABOR AND FREIGHT.

With respect to a residential application, this warranty may be transferred one (1) time, within the five (5) year period beginning from the date of original purchase by the Purchaser, to a subsequent buyer of the property upon which the Trex products were originally installed. With respect to a commercial application, this warranty is freely transferable to subsequent buyers of the property upon which the Trex products were originally installed.

To make a claim under this limited warranty, Purchaser, or the transferee, shall send to Trex, within the warranty period referred to above, a description of the claimed defect and proof of purchase, to the following address:

Trex Company, Inc.
Customer Relations
160 Exeter Drive
Winchester, VA 22603-8605

Trex does not warrant against and is not responsible for, and no implied warranty shall be deemed to cover, any condition attributable to: (1) improper installation of Trex products and/or failure to abide by Trex's installation guidelines, including but not limited to improper gapping; (2) use of Trex products beyond normal use and service conditions, or in an application not recommended by Trex's guidelines and local building codes; (3) movement, distortion, collapse or settling of the ground or the supporting structure on which Trex products are installed; (4) any act of God (such as flooding, hurricane, earthquake, lightning, etc.), environmental condition (such as air pollution, mold, mildew, etc.), staining from foreign substances (such as dirt, grease, oil, etc.), or normal weathering (defined as exposure to sunlight, weather and atmosphere which will cause any colored surface to gradually fade, chalk, or accumulate dirt or stains); (5) variations or changes in color of Trex products; (6) improper handling, storage, abuse or neglect of Trex products by Purchaser, the transferee or third parties; or (7) ordinary wear and tear.

No person or entity is authorized by Trex to make and Trex shall not be bound by any statement or representation as to the quality or performance of Trex products other than as contained in this warranty. This warranty may not be altered or amended except in a written instrument signed by Trex and Purchaser.

UNDER NO CIRCUMSTANCES WILL TREX BE LIABLE FOR SPECIAL, INCIDENTAL OR CONSEQUENTIAL DAMAGES, WHETHER SUCH DAMAGES ARE SOUGHT IN CONTRACT, IN TORT (INCLUDING BUT NOT LIMITED TO NEGLIGENCE AND STRICT LIABILITY) OR OTHERWISE, AND TREX'S LIABILITY WITH RESPECT TO DEFECTIVE PRODUCTS SHALL IN NO EVENT EXCEED THE REPLACEMENT OF SUCH PRODUCTS OR REFUND OF THE PURCHASE PRICE, AS DESCRIBED ABOVE.

Some States or Provinces do not allow the exclusion or limitation of incidental or consequential damages, so the above limitation or exclusion may not apply to you. This warranty gives you specific legal rights, and you may also have other rights that vary from State to State or Province to Province.

Copyright © 2012 Trex Company, Inc.

NOTES

NOTES

NOTES

decking & railing color palette

TREX TRANSCEND® DECKING

TREX TRANSCEND RAILING

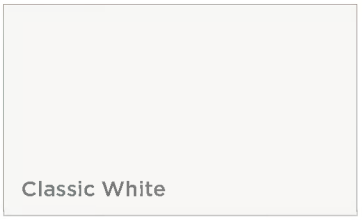

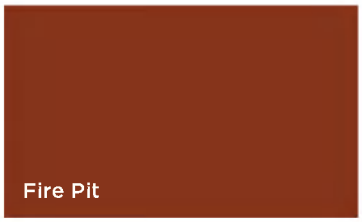

TREX ENHANCE® DECKING

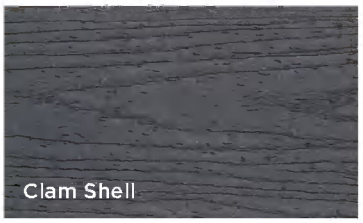

TREX® SELECT™ DECKING

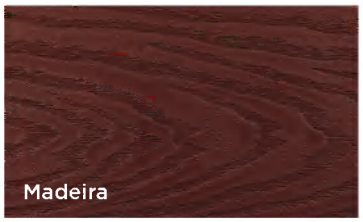

TREX® REVEAL™ ALUMINUM RAILING

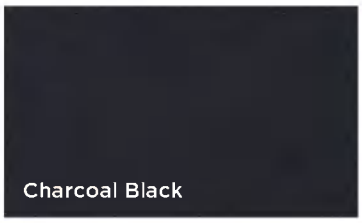

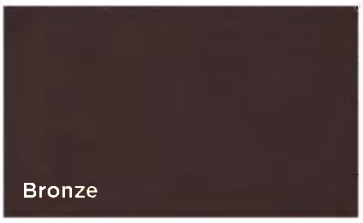

TREX SELECT RAILING

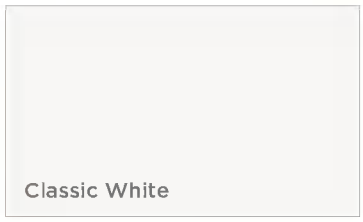

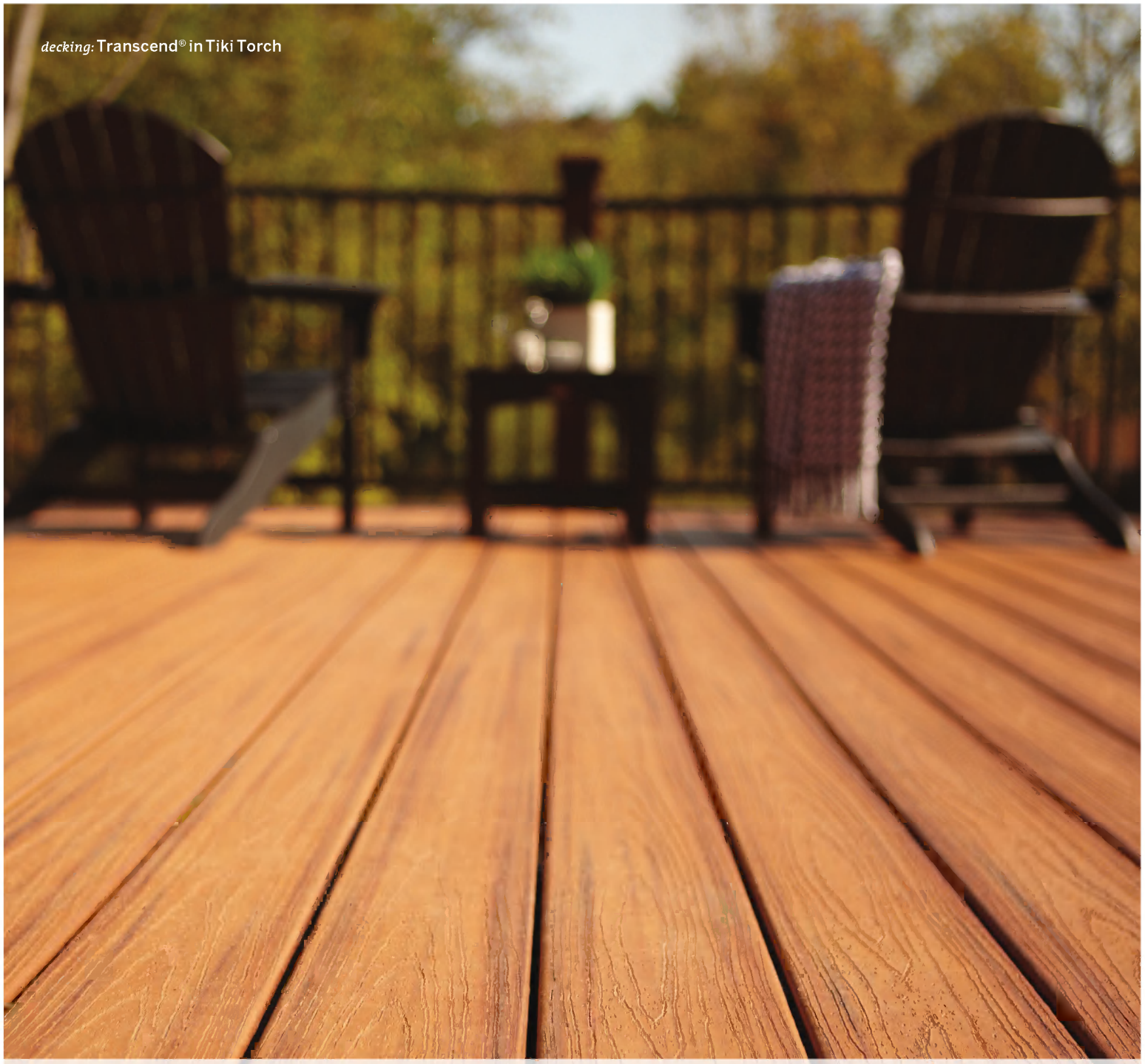

DECKING | RAILING | FRAMING | PORCH | FASCIA | TRIM | LIGHTING | DRAINAGE | FURNITURE | PERGOLA

FIND US ON

Trex®

OUTDOOR LIVING. ELEVATED.

Visit **trex.com** or call **1-800-BUY-TREX**

© 2013 Trex Company, Inc. All rights reserved. Trex®, the Trex logo, Trex Transcend®, Trex Enhance®, Trex® Select™, Trex Accents®, Trex Escapes®, Trex Designer Series Railing®, Trex Hideaway®, TrexTrim™, Trex® Reveal™, Trex® RainEscape®, Trex® DeckLighting™, Trex® Pergola™, Trex® CustomCurve™, TrexExpress™, and TrexPro® are either federally registered trademarks, trademarks or trade dress of Trex Company, Inc., Winchester, Virginia.