LAX series

by: MASHstudios

STORAGE BENCH
Assembly Instructions

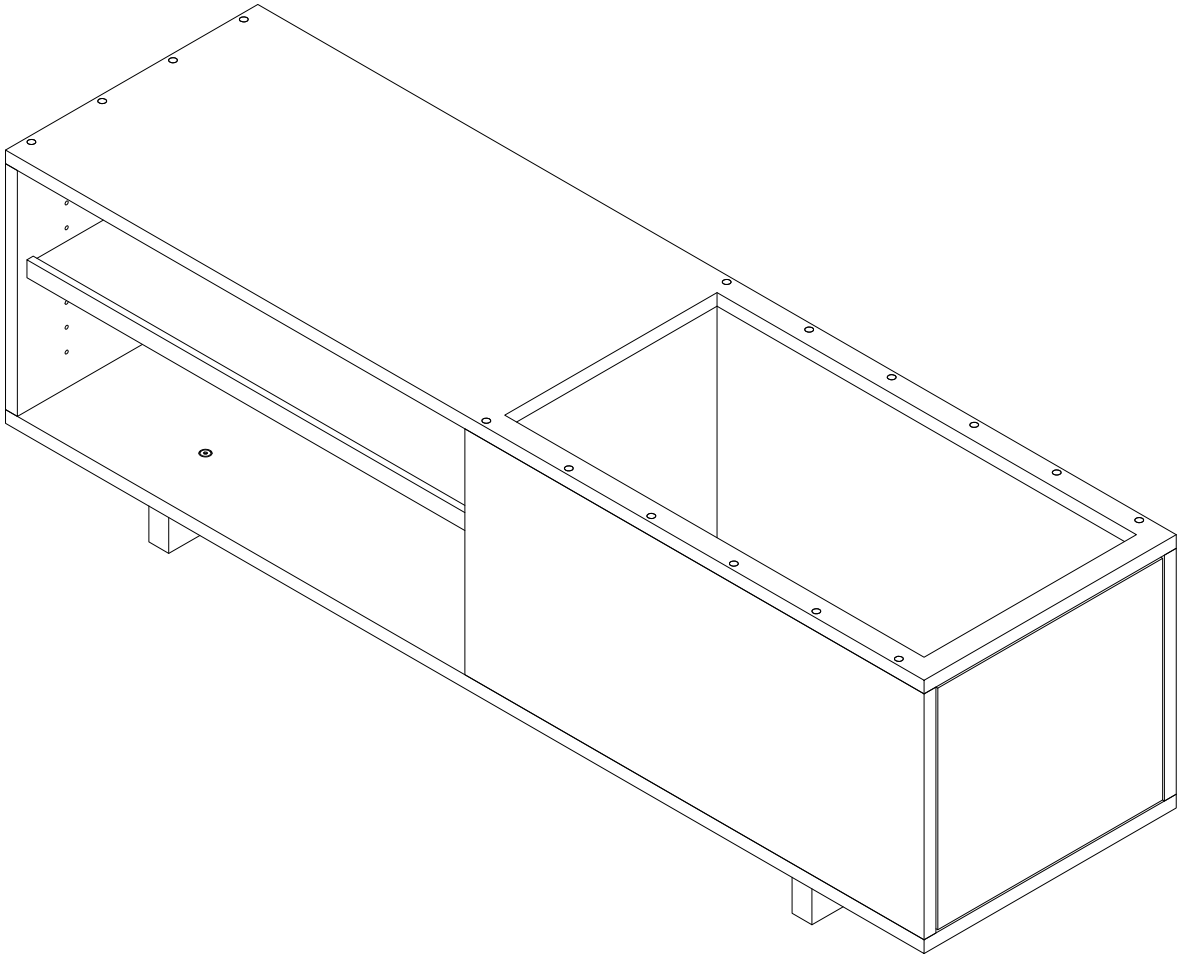

LAX series

by: MASHstudios

STORAGE BENCH
Parts List

Helpful Tip:
Separating components into like groups speeds up the process.

Ⓐ x 4

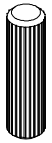

Ⓑ x 6

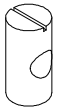

Ⓒ x 6

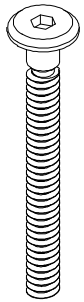

Ⓓ x 6

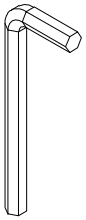

Ⓔ x 1

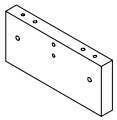

① x 2

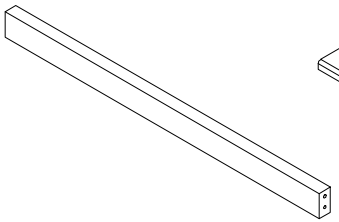

② x 1

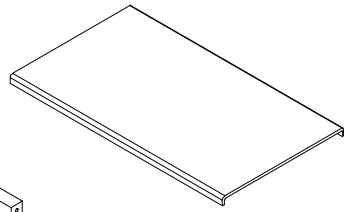

③ x 1

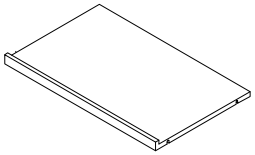

④ x 2

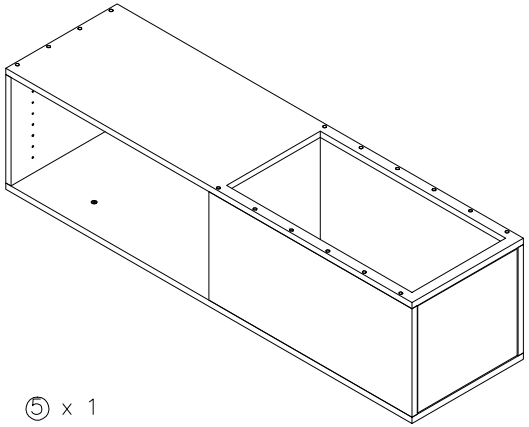

⑤ x 1

STEP 1

Ⓑ x 6

Ⓒ x 2

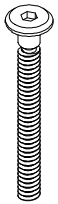

Ⓓ x 2

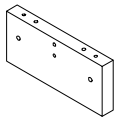

① x 2

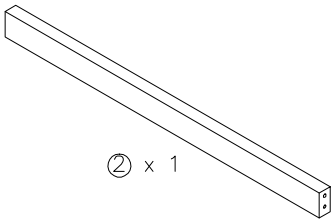

② x 1

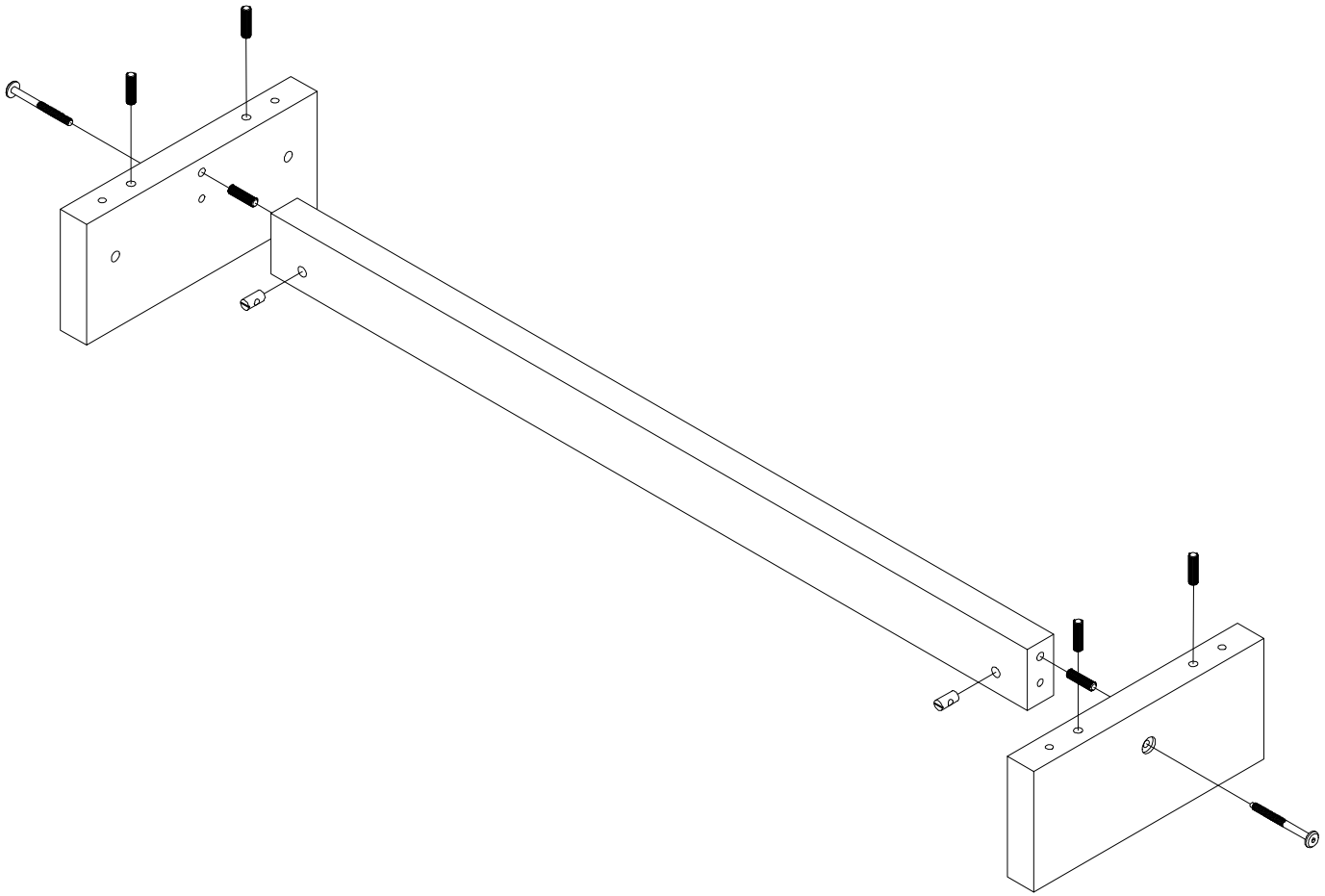

STEP 2

(C) x 4

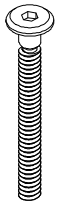

(D) x 4

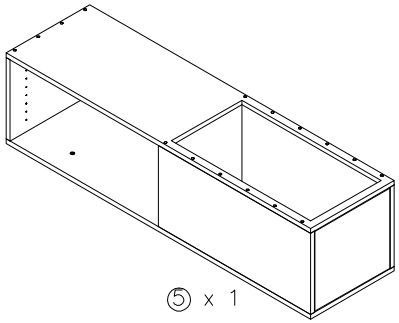

(5) x 1

(E) x 1

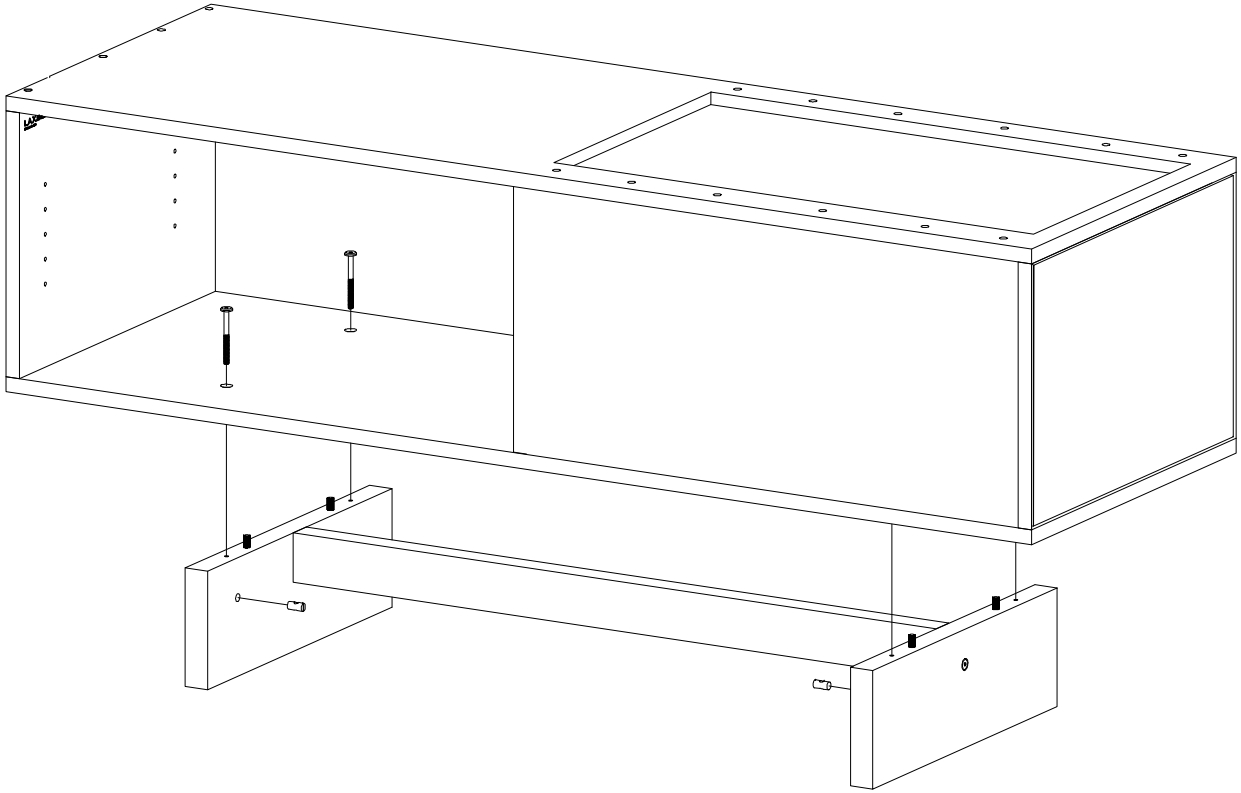

STEP 3

Ⓐ x 4

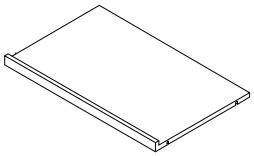

④ x1

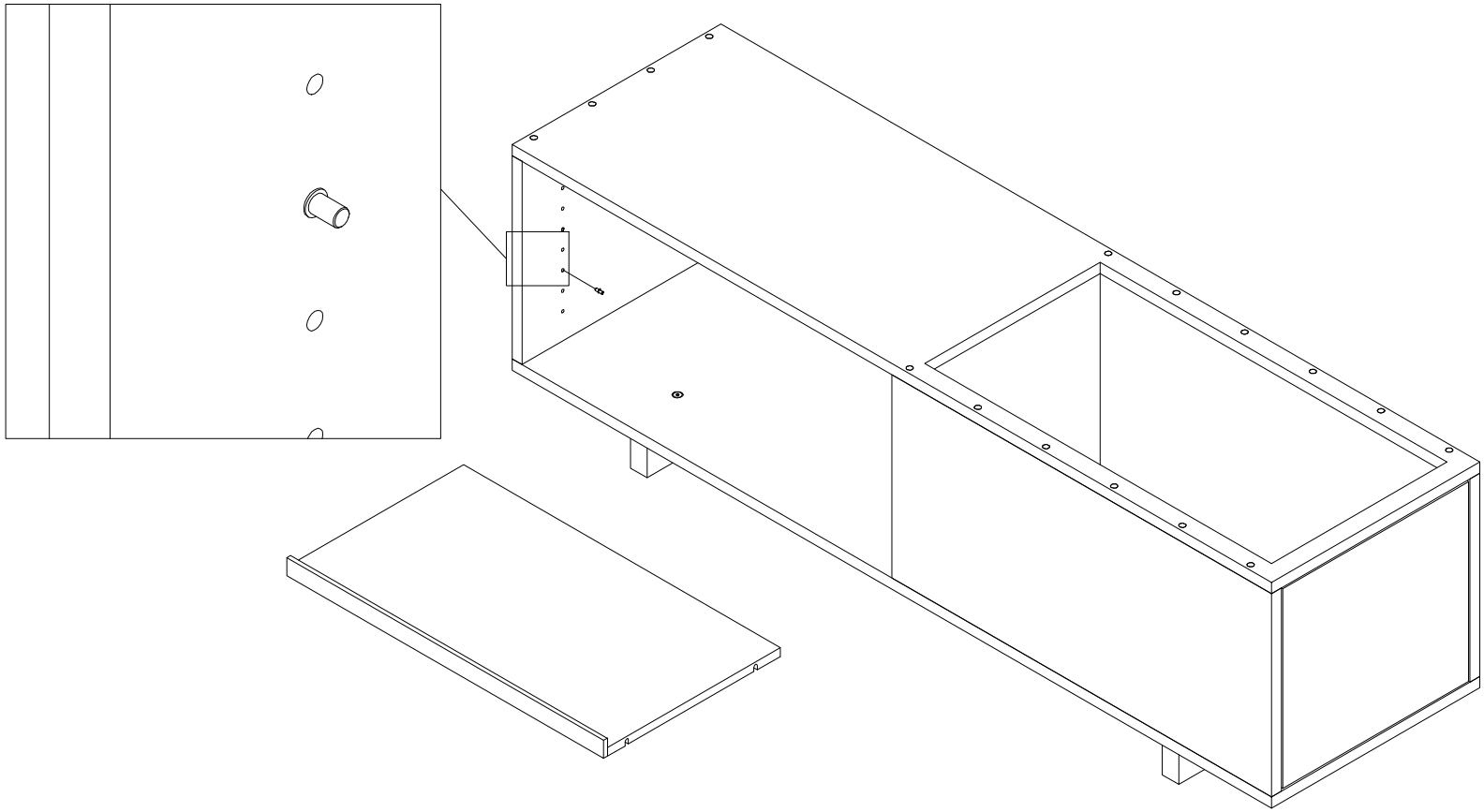

STEP 4

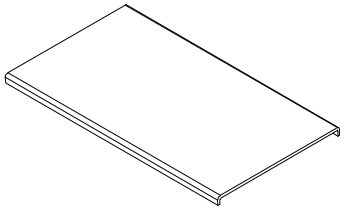
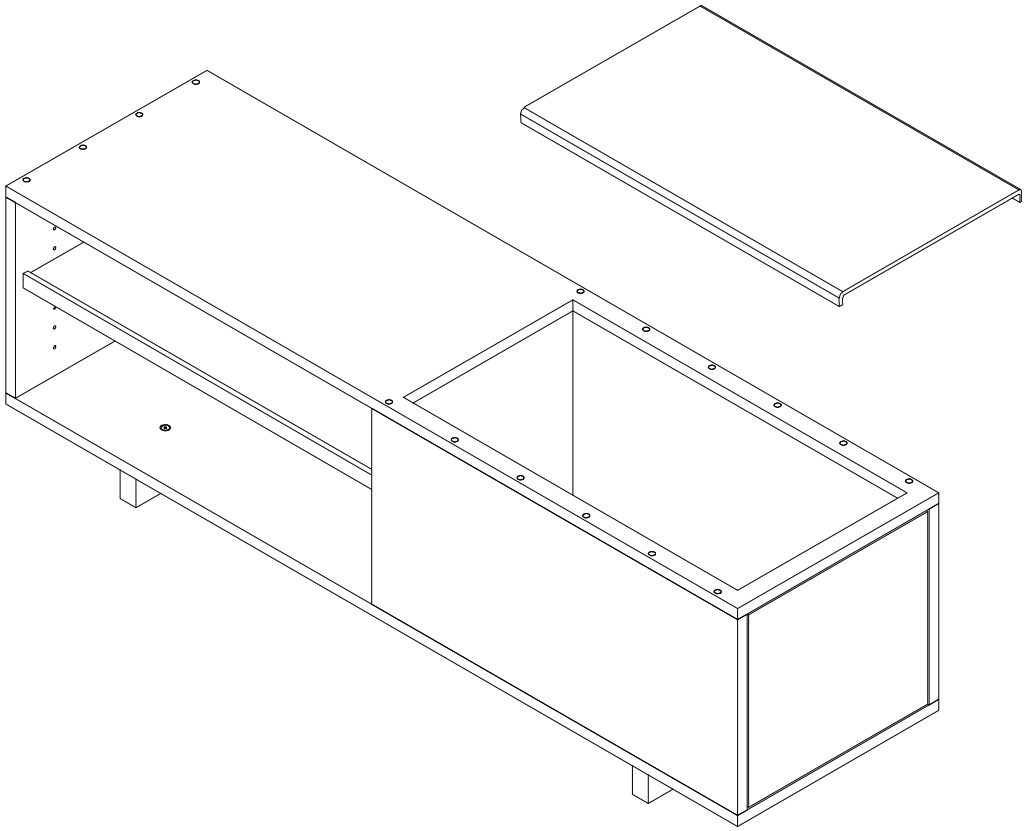
③ x 1