AMERICAN SIGNATURE, INC.

VCF

ASSEMBLY INSTRUCTIONS
ITEM NO: OD8255-20 ***Rct Dng Tbl - Chart House Charcoal***
ITEM NO: OD8305-20 ***Rct Dng Tbl - Chart House Gray***
ITEM NO: OD8339-20 ***Rct Dng Tbl - Chart House Nutmeg***

Thank you for purchasing this quality product. Be sure to check all packing material carefully for small parts, that may have come loose inside the carton during shipment.

PARTS LIST

No.	Description	Picture	Q'ty
1	Table top		1
2	Legs frame		2
3	Wood stretcher		1
4	Metal stretcher		1

HARDWARE LIST

No.	Description			Q'ty
A		Bolt Flat washer Lock washer	Φ1/4"*25mm Φ6/Φ19mm Φ6/Φ9mm	2
B		Bolt Flat washer Lock washer	Φ5/16"*45mm Φ9/Φ22mm Φ9/Φ11mm	10
C		Wrench	10mm	1
D		Wrench	12mm	1
E		Wrench	42mm	1

TOOL REQUIRED (NOT PROVIDED):
PHILLIPS SCREW DRIVER

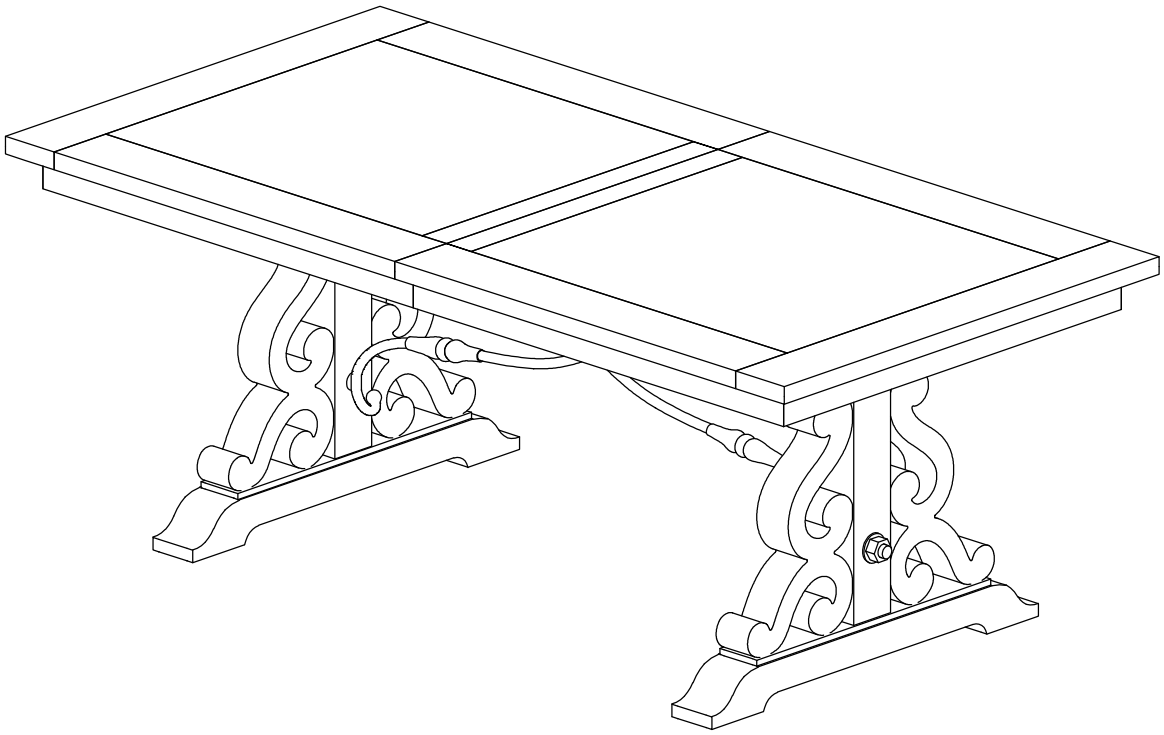

MADE IN VIETNAM

AMERICAN SIGNATURE, INC.

ASSEMBLY INSTRUCTIONS
ITEM NO: OD8255-20 ***Rct Dng Tbl - Chart House Charcoal***
ITEM NO: OD8305-20 ***Rct Dng Tbl - Chart House Gray***
ITEM NO: OD8339-20 ***Rct Dng Tbl - Chart House Nutmeg***

Thank you for purchasing this quality product. Be sure to check all packing material carefully for small parts, that may have come loose inside the carton during shipment.

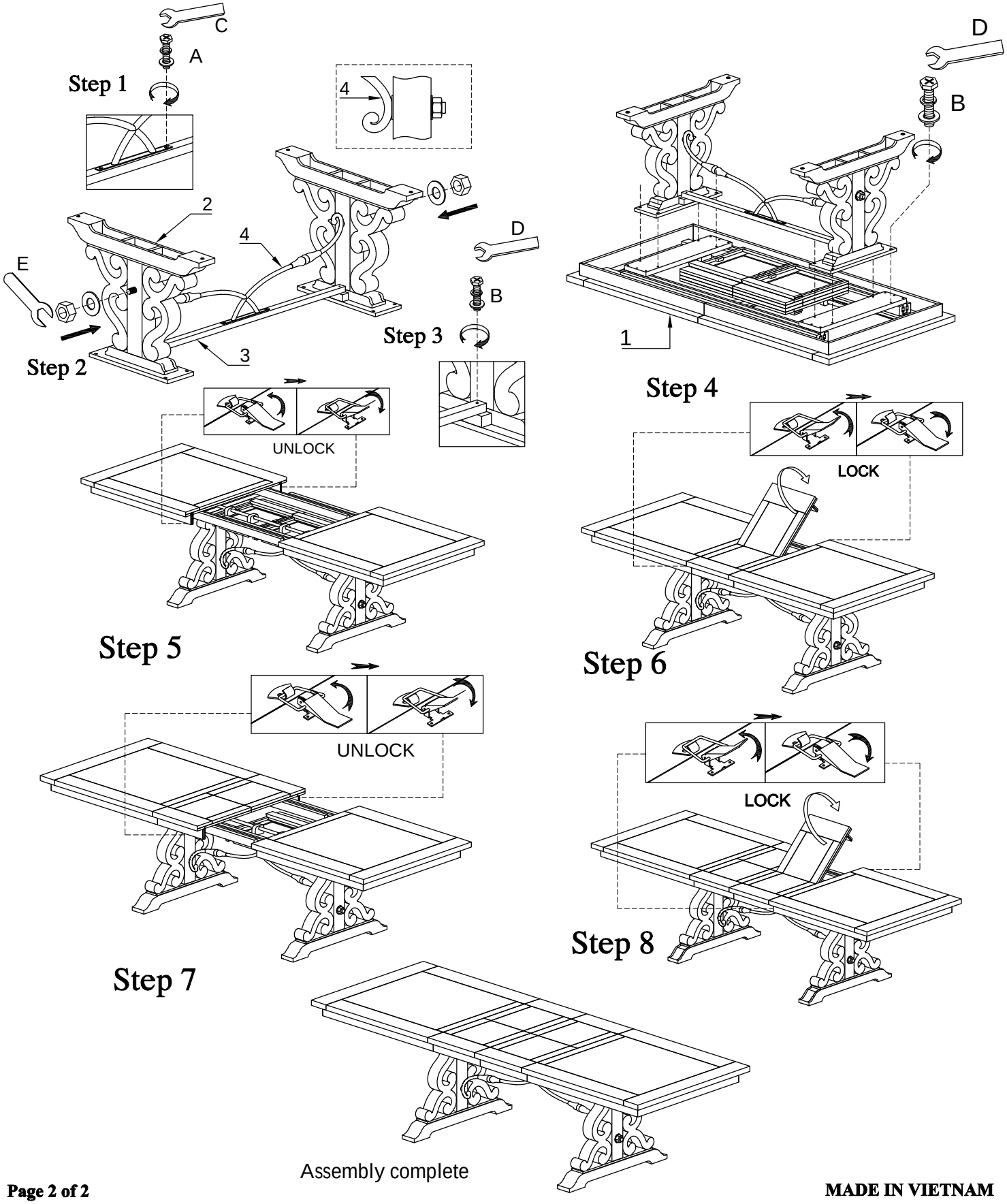

MADE IN VIETNAM

AMERICAN SIGNATURE, INC.

VCF

ASSEMBLY INSTRUCTIONS

ITEM NO: OD8255-63 ***Host Chair - Chart House Charcoal***
ITEM NO: OD8305-63 ***Host Chair - Chart House Gray***
ITEM NO: OD8339-63 ***Host Chair - Chart House Nutmeg***

Thank you for purchasing this quality product. Be sure to check all packing material carefully for small parts, that may have come loose inside the carton during shipment.

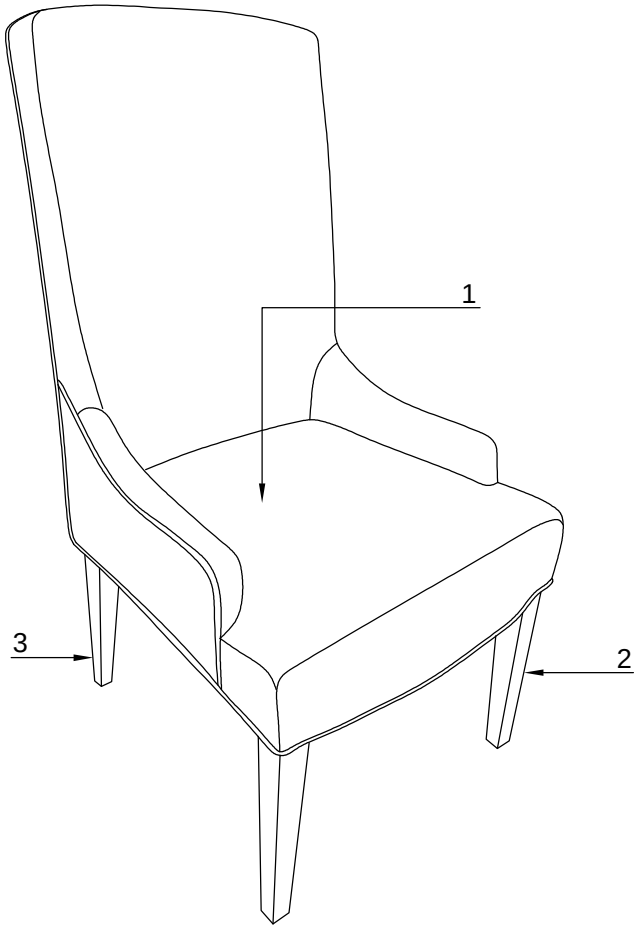

TOOL REQUIRED (NOT PROVIDED):
PHILLIPS SCREW DRIVER

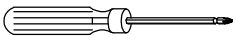

HARDWARE LIST

No.	Description			Q'ty
A		Bolt Flat washer Lock washer	Φ1/4"*50mm Φ6/Φ19mm Φ6/Φ9mm	8
B		Wrench	10mm	1

PARTS LIST

No.	Description	Picture	Q'ty
1	Cushion Seat		1
2	Front legs		2
3	Left & right back legs		2

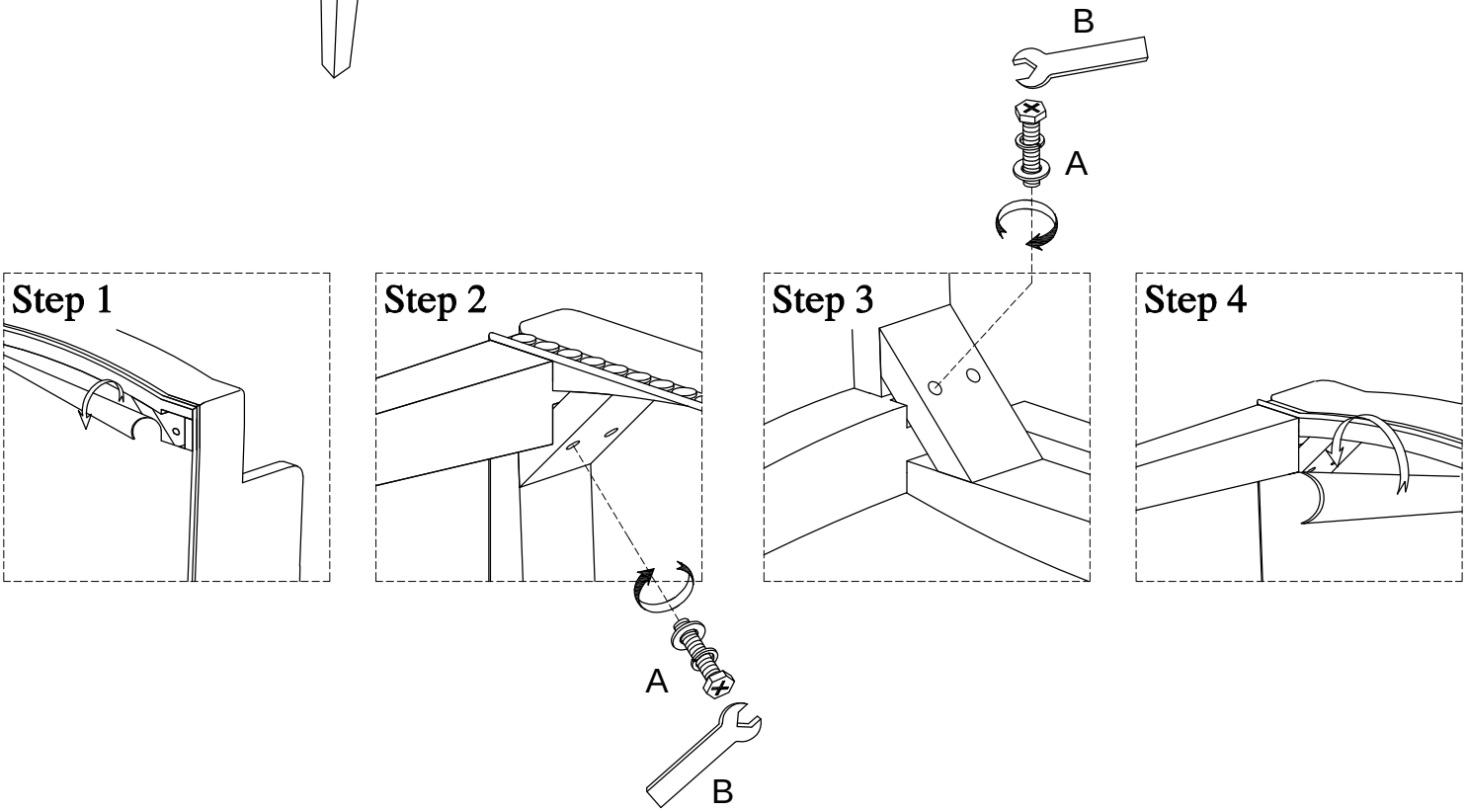

MADE IN VIETNAM

AMERICAN SIGNATURE, INC.

VCF

ASSEMBLY INSTRUCTIONS

ITEM NO: OD8255-62 ***Slat Bk Sd Chr - Chart House Charcoal***
ITEM NO: OD8305-62 ***Slat Bk Sd Chr - Chart House Gray***
ITEM NO: OD8339-62 ***Slat Bk Sd Chr - Chart House Nutmeg***

Thank you for purchasing this quality product. Be sure to check all packing material carefully for small parts, that may have come loose inside the carton during shipment.

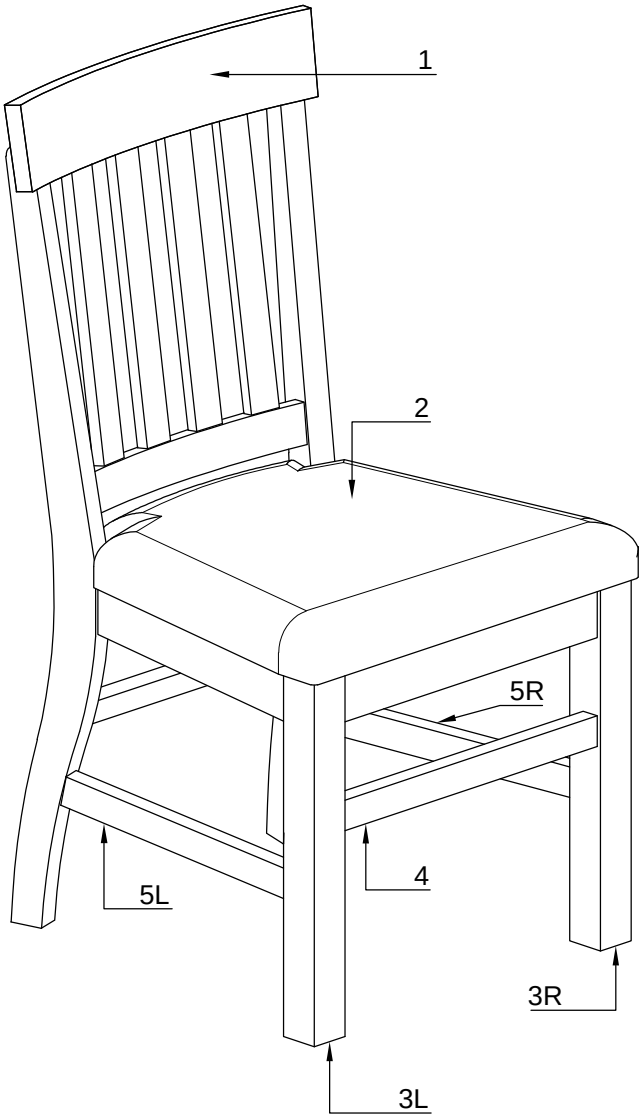

TOOL REQUIRED (NOT PROVIDED):
PHILLIPS SCREW DRIVER

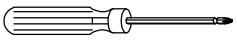

HARDWARE LIST

No.	Description			Q'ty
A		Bolt Flat washer Lock washer	Φ5/16"*32mm Φ9/Φ22mm Φ9/Φ11mm	3
B		Bolt Flat washer Lock washer	Φ5/16"*70mm Φ9/Φ22mm Φ9/Φ11mm	4
C		Flat washer	Φ9/Φ22mm	4
D		Lock washer	Φ9/Φ11mm	4
E		Nut	5/16"	4
F		Wrench	12mm	1
G		Screw	Φ4*40	6

PARTS LIST

No.	Description	Picture	Q'ty
1	Chair back		1
2	Seat frame		1
3	Left & Right legs		2
4	Front stretcher		1
5	Left & Right stretchers		2

Step 1

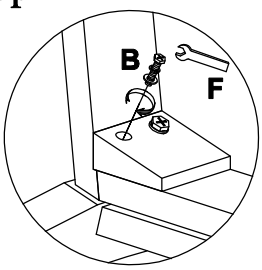

Step 2

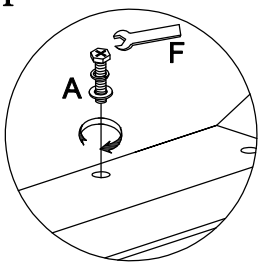

Step 3

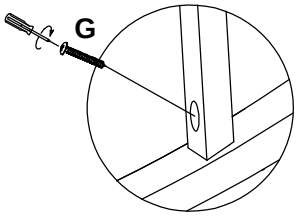

Step 4

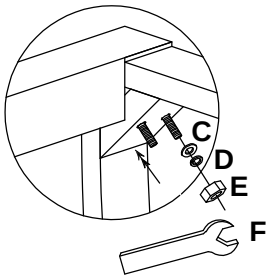

MADE IN VIETNAM