AMERICAN SIGNATURE, INC.

ASSEMBLY INSTRUCTION

ITEM NO : B00957 5LEDH QN HB W/LT&REMOTE-SABRINA
B00957 6LEDH KG HB W/LT&REMOTE-SABRINA

Thank you for purchasing this quality product. Be sure to check all packing material carefully for small parts that have come loose inside the carton during shipment.

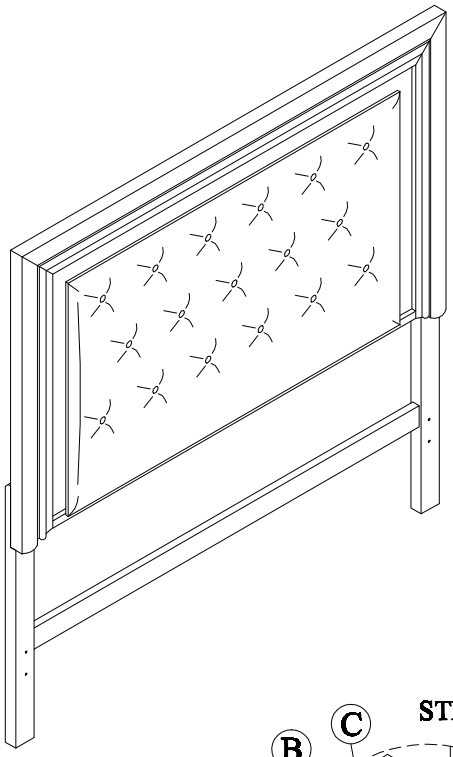

PARTS LIST

No.	Descrition	Sketch	Q'ty
1	Headboard		1 Pc
2	Leg	Ⓛ Sticker / Ⓡ Sticker	2 Pcs
3	Stretcher		1 Pc

HARDWARE LIST

No.	Sketch	Descrition	Size	Q'ty
A		JCBB Screw	M8 x 35mm	6 Pcs
B		Spring Washer	M8	6 Pcs
C		Flat Washer	M8 x 22mm	6 Pcs
D		Allen Key	M5	1 Pc
E		JCBC Screw	M6 x 50mm	2 Pcs
F		Spring Washer	M6	2 Pcs
G		U Washer		2 Pcs
H		Allen Key	M4	1 Pc
J		Straight Allen Key	M4 x 100mm	1 Pc
K		Straight Allen Key	M5 x 100mm	1 Pc
L		Adaptor		1 Pc
M		Remote		1 Pc

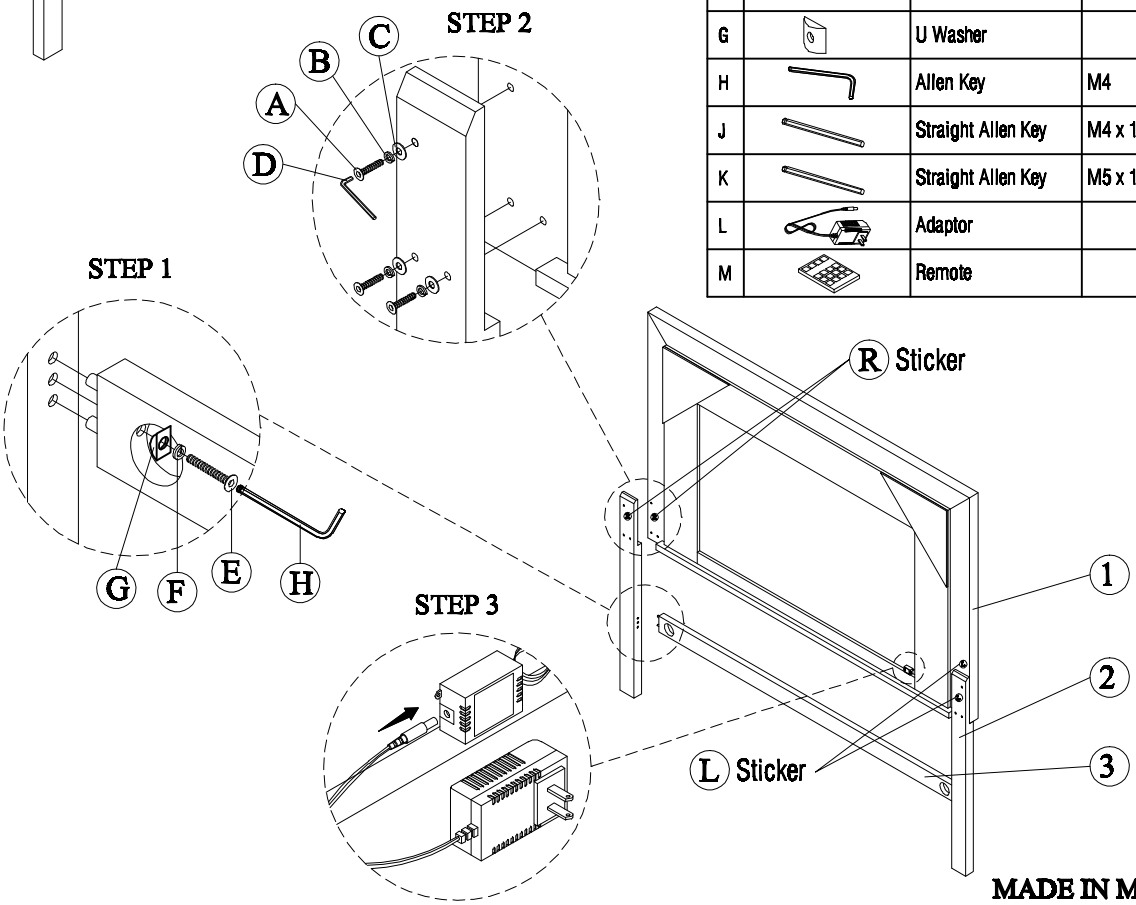

MADE IN MALAYSIA

EXCLUSIVE AMERICAN SIGNATURE DESIGN-DO NOT REPRODUCE WITHOUT WRITTEN PERMISSION

AMERICAN SIGNATURE, INC.

ASSEMBLY INSTRUCTION

ITEM NO : B00957 5LEDH QN HB W/LT&REMOTE-SABRINA
B00957 5F QUEEN FB/SLTS-SABRINA
B00957 56R QN/KG RAILS-SABRINA

Thank you for purchasing this quality product. Be sure to check all packing material carefully for small parts that have come loose inside the carton during shipment.

TOOL REQUIRED (NOT PROVIDED)	
Screw Driver	

PARTS LIST			
No.	Description	Sketch	Qty
1	Headboard		1 Pc
2	Footboard		1 Pc
3	Side Rail		2 Pcs
4	Slat		4 Pcs
5	Support		4 Pcs

HARDWARE LIST				
No.	Sketch	Description	Size	Qty
A		JCBB Screw	M8 x 20mm	8 Pcs
B		Spring Washer	M8	8 Pcs
C		Flat Washer	M8 x 22mm	8 Pcs
D		Allen Key	M5	1 Pc
E		JCBC Screw	M6 x 40mm	4 Pcs
F		Spring Washer	M6	4 Pcs
G		Allen Key	M4	1 Pc
H		CSK Screw	M4 x 32mm	8 Pcs
J		Straight Allen Key	M4 x 100mm	1 Pc
K		Straight Allen Key	M5 x 100mm	1 Pc

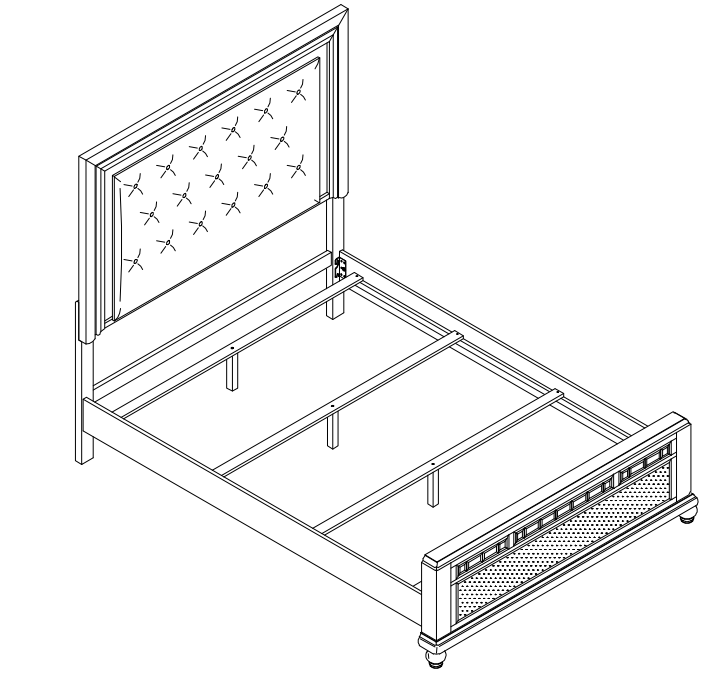

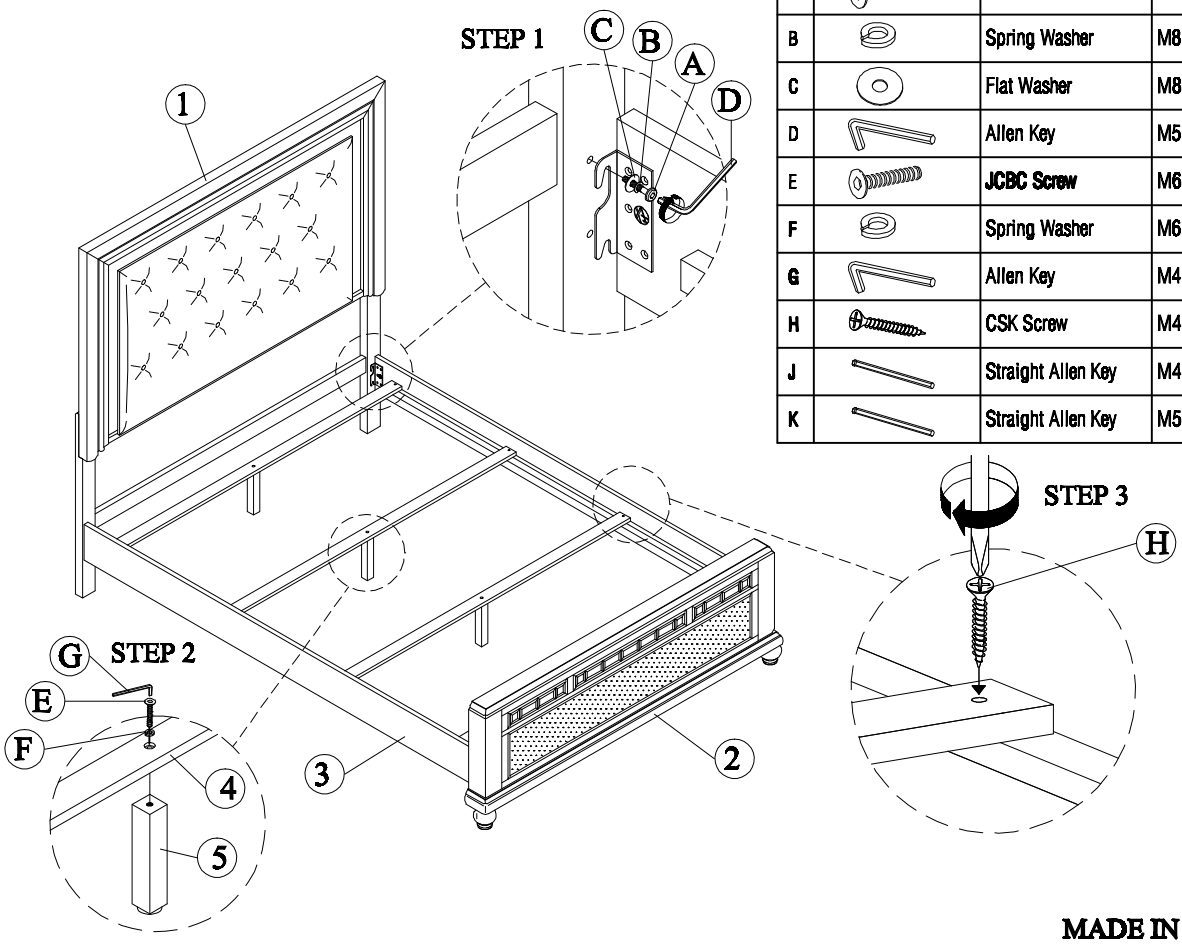

MADE IN MALAYSIA

EXCLUSIVE AMERICAN SIGNATURE DESIGN-DO NOT REPRODUCE WITHOUT WRITTEN PERMISSION

AMERICAN SIGNATURE, INC.

ASSEMBLY INSTRUCTION
ITEM NO : B00957 N NTSTAND W/USB&LT-SABRINA

Thank you for purchasing this quality product. Be sure to check all packing material carefully for small parts that have come loose inside the carton during shipment.

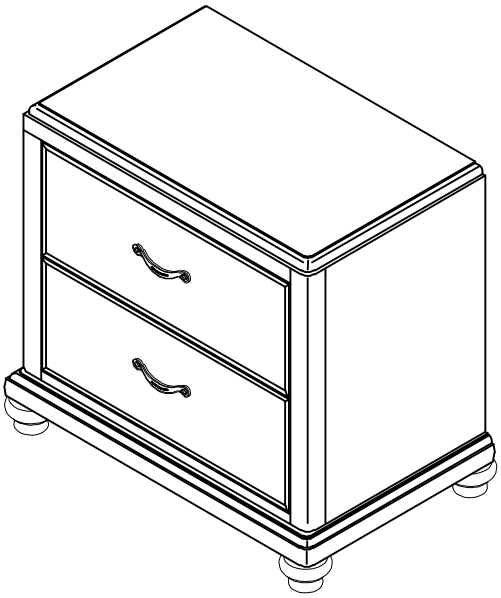

TOOL REQUIRED (NOT PROVIDED)	
Screw Driver	

PARTS LIST			
No.	Descrition	Sketch	Qty
1	Nightstand		1 pc
2	Bun Foot		4 Pcs

HARDWARE LIST				
No.	Sketch	Descrition	Size	Qty
A		Anti-tipping Hardware		4 pcs

STEP 1

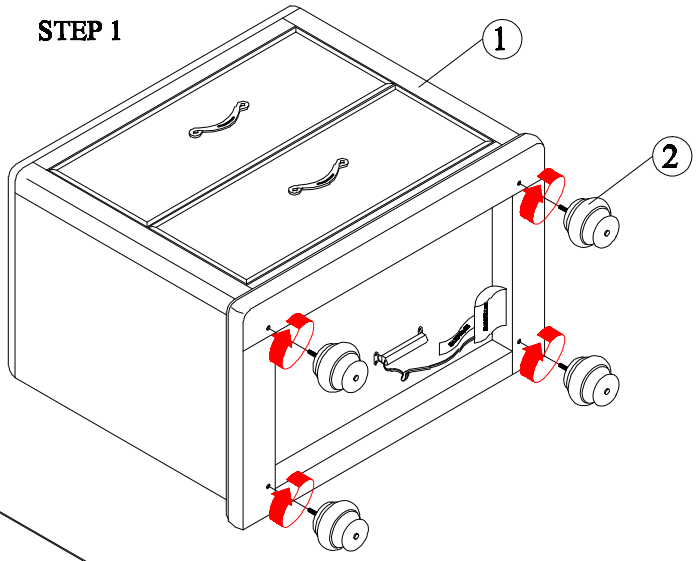

STEP 2

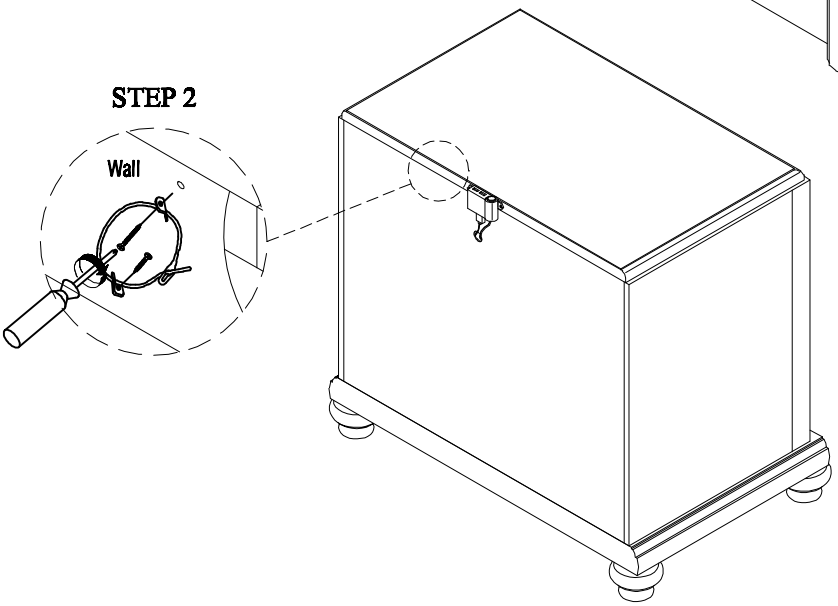

MADE IN MALAYSIA

EXCLUSIVE AMERICAN SIGNATURE DESIGN-DO NOT REPRODUCE WITHOUT WRITTEN PERMISSION

AMERICAN SIGNATURE, INC.

ASSEMBLY INSTRUCTION
ITEM NO : B00957 D DRESSER-SABRINA

Thank you for purchasing this quality product. Be sure to check all packing material carefully for small parts that have come loose inside the carton during shipment.

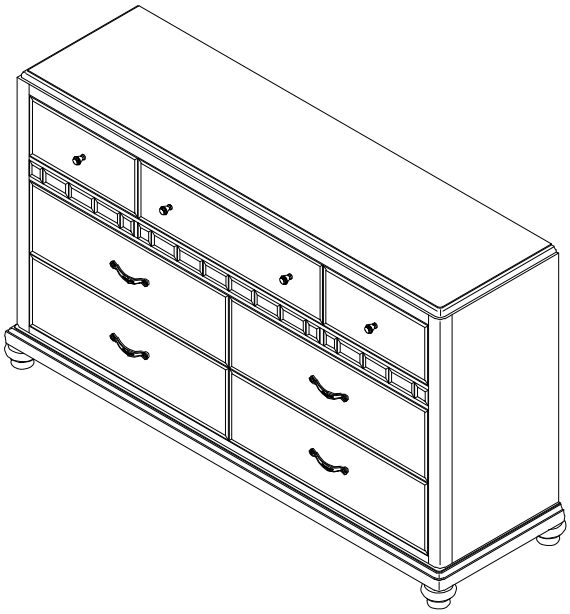

TOOL REQUIRED (NOT PROVIDED)	
Screw Driver	

PARTS LIST			
No.	Descrition	Sketch	Q'ty
1	Dresser		1 pc
2	Bun Foot		4 Pcs
3	Support Leg		1 Pc

HARDWARE LIST				
No.	Sketch	Descrition	Size	Q'ty
A		Anti-tipping Hardware		4 pcs

STEP 1

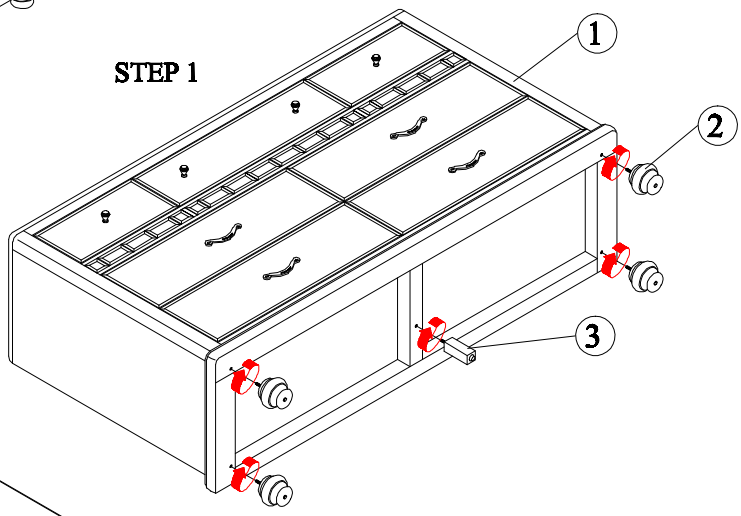

STEP 2

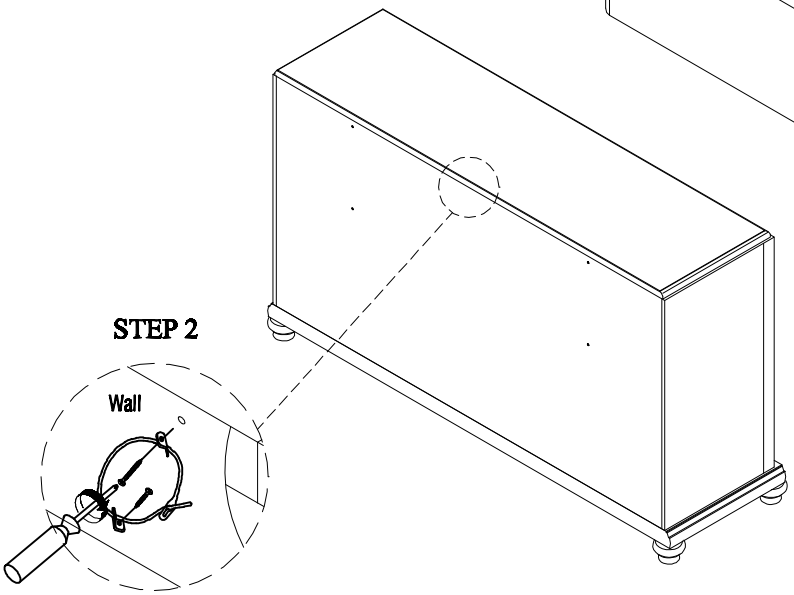

MADE IN MALAYSIA

EXCLUSIVE AMERICAN SIGNATURE DESIGN-DO NOT REPRODUCE WITHOUT WRITTEN PERMISSION

AMERICAN SIGNATURE, INC.

ASSEMBLY INSTRUCTION

ITEM NO : B00957 LEDM MIRROR W/LT&REMOTE-SABRINA

Thank you for purchasing this quality product. Be sure to check all packing material carefully for small parts that have come loose inside the carton during shipment.

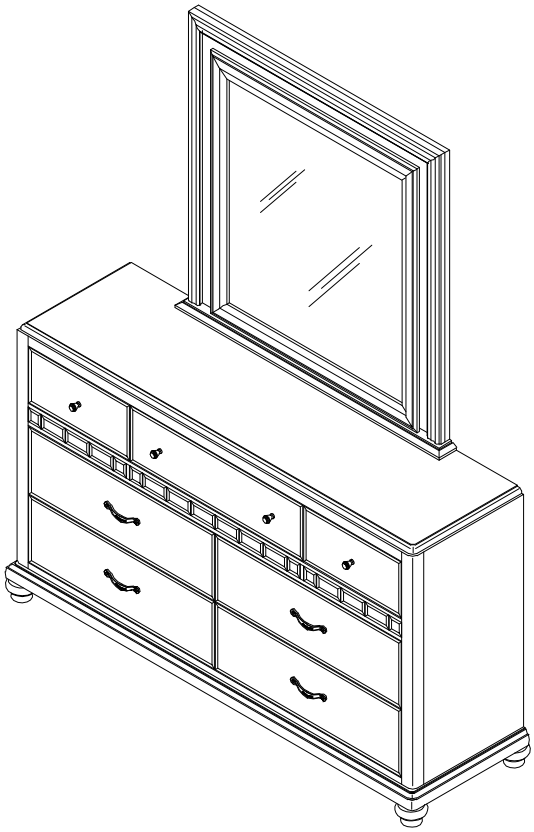

PARTS LIST

No.	Descrition	Sketch	Q'ty
1	Dresser		1 Pc
2	Mirror		1 Pc
3	Mirror Support		2 Pcs

HARDWARE LIST

No.	Sketch	Descrition	Size	Q'ty
A		JCBC Screw	M6 x 40mm	8 Pcs
B		Spring Washer	M6	8 Pcs
C		Flat Washer	M6 x 19mm	8 Pcs
D		Allen Key	M4	1 Pc
E		Straight Allen Key	M4 x 100mm	1 Pc
F		Adaptor		1 Pc
G		Remote		1 Pc

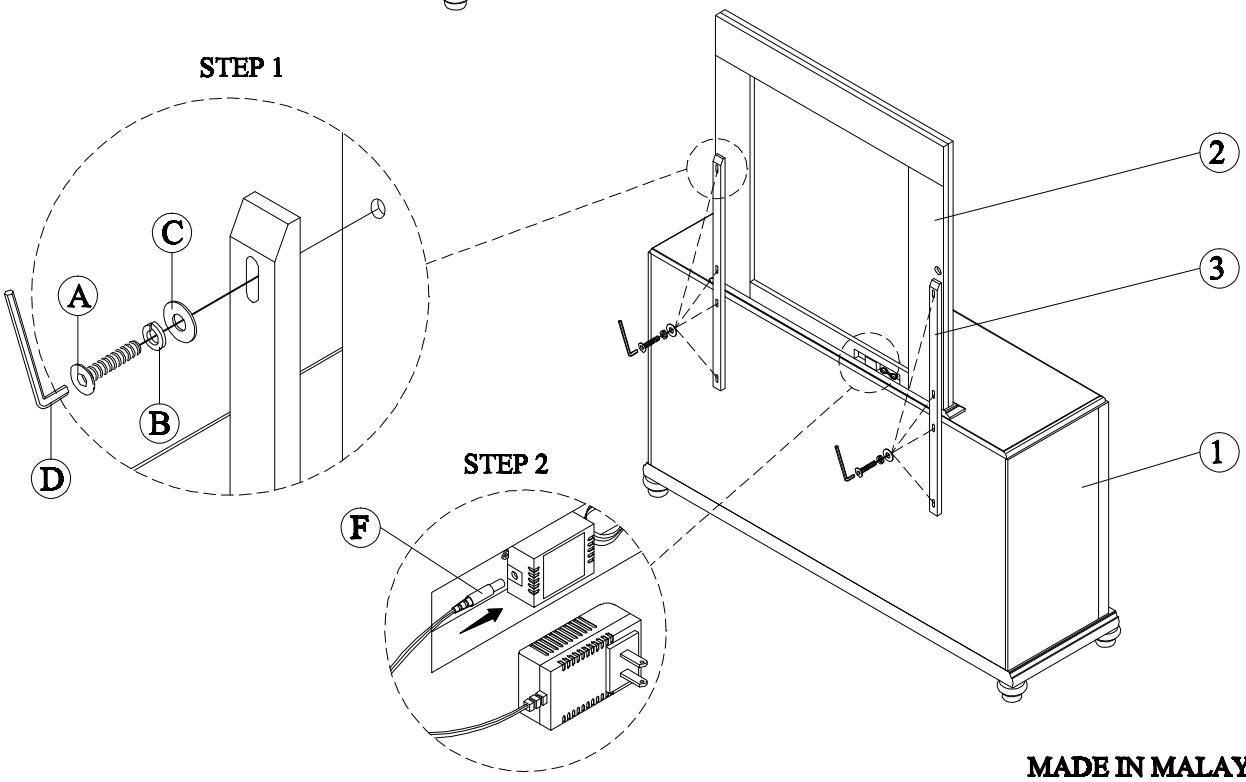

MADE IN MALAYSIA

EXCLUSIVE AMERICAN SIGNATURE DESIGN-DO NOT REPRODUCE WITHOUT WRITTEN PERMISSION