ASSEMBLY INSTRUCTIONS

ITEM NO : 1565VC-310-OG / CP / L

DRAWER CHEST - GRISTMILL GRAY / COCOA PEARL / FRENCH LINEN

Thank you for purchasing this quality product. Be sure to check all packing material carefully for small parts that may have come loose inside the carton during shipment

E		Mounting Bracket	2PCS
F		Nylon Restraint	1PC
G		Long screw	1PC
H		Short screw	1PC
I		Plastic wall anchor	1PC

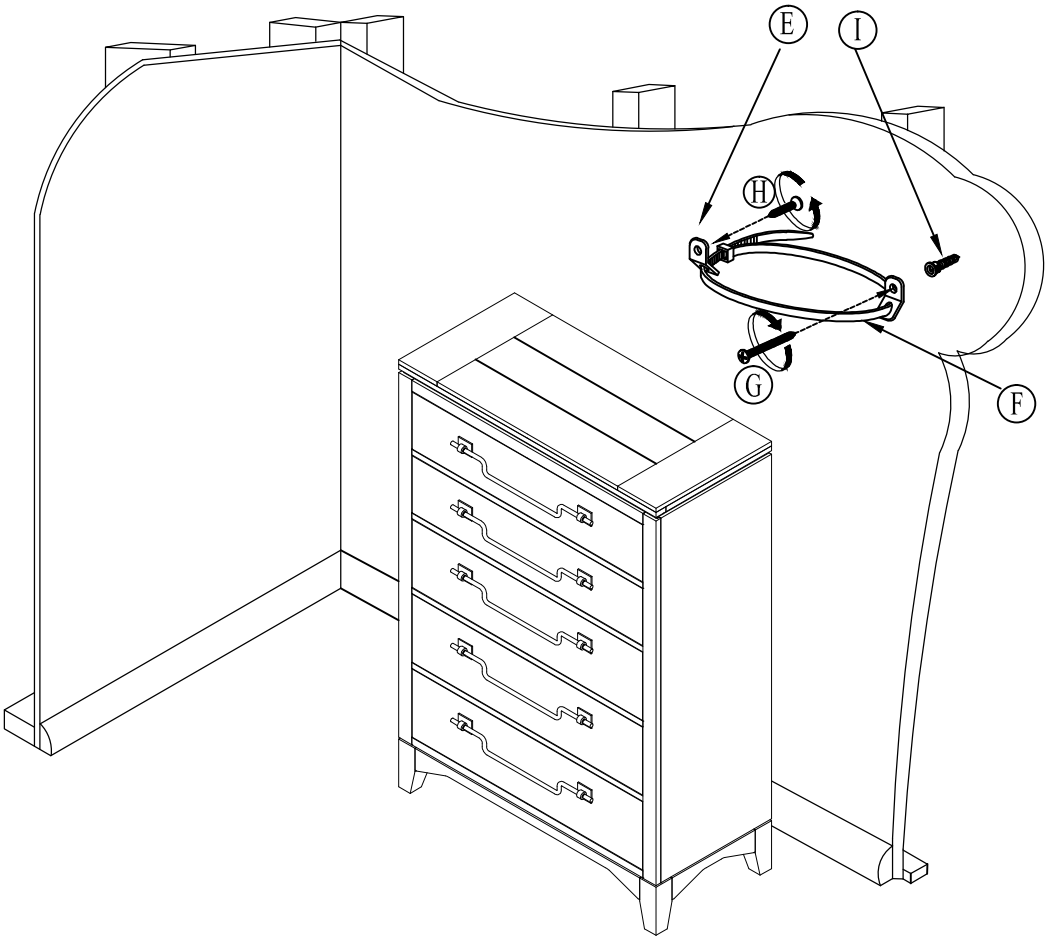

NOTE: ANTI-TIPPING KIT INSTRUCTIONS:
REFER TO KIT'S BAG

MADE IN VIET NAM